CONTRACT DOCUMENTS FOR
CONSTRUCTION OF

CROSSTOWN AND SOUTH FAYETTE WATER TREATMENT PLANTS HOSELESS SOLIDS COLLECTION SYSTEM

Fayette County Water System

PREPARED FOR

FAYETTE COUNTY WATER SYSTEM
FAYETTE COUNTY, GEORGIA

VOLUME 2 OF 2
DRAWINGS

For information regarding this project, contact:
NATASHA DUGGAN,
FAYETTE COUNTY PURCHASING DEPARTMENT
140 STONEWALL AVE. W., SUITE 204
FAYETTEVILLE, GA 30214
nduggan@fayettecountyga.gov

Jacobs

Project No.
D3101212

MARCH 2021

BID DOCUMENTS

01-G-000_D3101212.dgn

DRAWING NUMBER LEGEND:

DISCIPLINE CODE		FACILITY NUMBERS		SHEET TYPE	
G	GENERAL	01	GENERAL	000	GENERAL
C	CIVIL	05	SITE CIVIL, ELECTRICAL	100	DEMOLITION
N	INSTRUMENTATION & CONTROL	08	INSTRUMENTATION & CONTROL	200	PLANS
D	PROCESS MECHANICAL	CT-10	CROSSTOWN SEDIMENTATION BASINS	300	SECTIONS & ELEVATIONS
E	ELECTRICAL	CT-20	CROSSTOWN CHEMICAL BUILDING	400	ENLARGED PLANS
		SF-10	SOUTH FAYETTE SEDIMENTATION BASINS	500	DETAILS
		SF-20	SOUTH FAYETTE FILTER BUILDING	600	SCHEDULES
		99	STANDARD DETAILS		

DRAWING INDEX

SHT	DWG NO	TITLE
	GENERAL	
		COVER
1	01-G-001	DRAWING INDEX, LOCATION MAP, GENERAL LEGEND
2	01-G-002	CIVIL LEGEND
3	01-G-003	STRUCTURAL NOTES
4	01-G-004	PROCESS MECHANICAL LEGEND
5	01-G-005	INSTRUMENTATION AND CONTROLS LEGEND
6	01-G-006	INSTRUMENTATION AND CONTROLS LEGEND
7	01-G-007	ELECTRICAL LEGEND
	SITE CIVIL, ELECTRICAL	
8	CT-05-C-201	CROSSTOWN WTP PARTIAL SITE PLAN
9	CT-05-E-201	CROSSTOWN WTP PARTIAL SITE PLAN
10	SF-05-C-201	SOUTH FAYETTE WTP PARTIAL SITE PLAN
11	SF-05-E-201	SOUTH FAYETTE WTP PARTIAL SITE PLAN
	INSTRUMENTATION AND CONTROL	
12	08-N-001	P&ID CROSSTOWN WTP SEDIMENTATION BASINS 1 - 8
13	08-N-002	P&ID SOUTH FAYETTE WTP SEDIMENTATION BASINS 1 - 4
	CROSSTOWN WTP	
14	CT-10-M-101	SEDIMENTATION BASINS 5-8 DEMOLITION PLAN
15	CT-10-M-102	SEDIMENTATION BASINS 5-8 DEMOLITION SECTIONS
16	CT-10-M-103	SEDIMENTATION BASINS 5-8 DEMOLITION DISCHARGE PIPING
17	CT-10-M-201	SEDIMENTATION BASINS 5-8 LOWER PLAN
18	CT-10-M-202	SEDIMENTATION BASINS 5-8 UPPER PLAN
19	CT-10-M-301	DISCHARGE PIPING SECTIONS
20	CT-20-M-104	CHEMICAL BUILDING DEMOLITION AIR COMPRESSOR SYSTEM
21	CT-10-E-201	SEDIMENTATION BASINS UPPER POWER PLAN
22	CT-10-E-601	SEDIMENTATION BASINS WIRING DIAGRAMS
23	CT-20-E-201	CHEMICAL BUILDING PLAN
	SOUTH FAYETTE WTP	
24	SF-10-M-101	SEDIMENTATION BASINS 1-4 DEMOLITION PLAN
25	SF-10-M-102	SEDIMENTATION BASINS 1-4 DEMOLITION SECTIONS
26	SF-10-M-103	SEDIMENTATION BASINS 1-4 DEMOLITION DISCHARGE PIPING
27	SF-10-M-201	SEDIMENTATION BASINS 1-4 LOWER PLAN
28	SF-10-M-202	SEDIMENTATION BASINS 1-4 UPPER PLAN
29	SF-10-M-301	SEDIMENTATION BASINS 1-4 SECTIONS
30	SF-10-E-201	SEDIMENTATION BASINS 1-4 UPPER POWER PLAN
31	SF-20-E-201	FILTER BUILDING DEMOLITION AIR COMPRESSOR SYSTEM
32	SF-20-E-202	FILTER BUILDING DEMOLITION SECOND FLOOR
	STANDARD DETAILS	
33	99-E-501	ELECTRICAL STANDARD DETAILS
34	99-C-501	CIVIL STANDARD DETAILS
35	99-M-501	PROCESS MECHANICAL STANDARD DETAILS
36	99-N-501	INSTRUMENTATION AND CONTROL STANDARD DETAILS

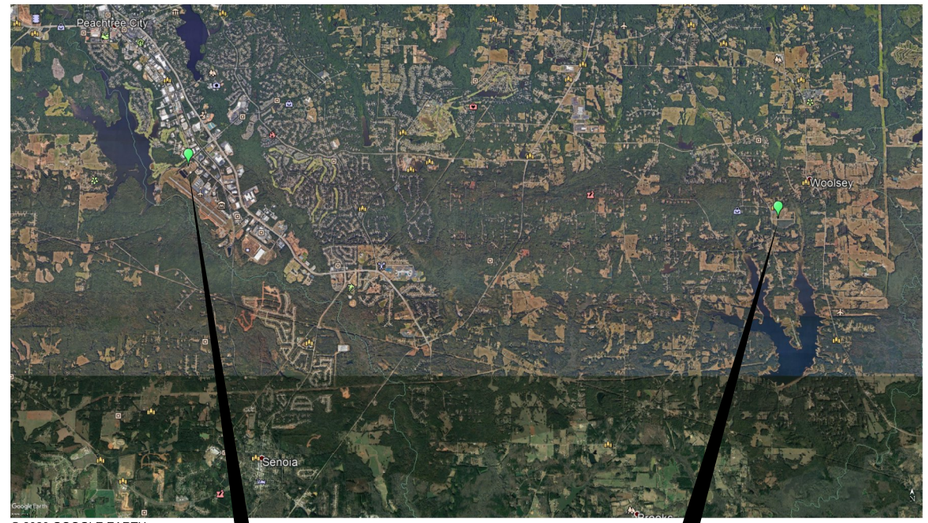

© 2020 GOOGLE EARTH

CROSSTOWN WTP
3500 TDK BLVD
PEACHTREE CITY, GA 30269

SOUTH FAYETTE WTP
880 ANTIOCH ROAD
FAYETTEVILLE, GA 30215

N

LOCATION MAP
NTS

SECTION / DETAIL DESIGNATIONS

SECTION (LETTER) OR DETAIL (NUMERAL) DESIGNATION

DRAWING NUMBER (REPLACED WITH A LINE IF TAKEN AND SHOWN ON SAME SHEET)

ON DRAWING WHERE SECTION OR DETAIL IS TAKEN:

DRAWING NUMBER WHERE SHOWN

CT-10-M-301

SECTION
SCALE

CT-10-M-201

ON DRAWING WHERE SECTION IS SHOWN:

DRAWING NUMBER(S) WHERE TAKEN

DETAIL
SCALE

CT-10-M-201

ON DRAWING WHERE DETAIL IS SHOWN:

DRAWING NUMBER(S) WHERE TAKEN

DRAWING TITLE
SCALE

ON DRAWING WHERE ONLY A TITLE IS REQUIRED WITH NO REFERENCE (eg: ELEVATIONS)

SECTION CALLOUT WHERE SECTION IS ON THE SAME SHEET AND CUT EXTENDS TO A FIXED LIMIT

CT-10-M-301 CT-10-M-301

SECTION CALLOUT WHERE SECTION IS ON ANOTHER SHEET AND CUT EXTENDS THROUGHOUT ENTIRE SHEET

GRID LINE INDICATOR

KEYNOTE NUMBER

REVISION / ADDENDA NUMBER

NORTH ARROW

PHOTO DESIGNATION

ARROW POINTS IN DIRECTION THE PHOTO WAS TAKEN

PHOTO NUMBER

DWG NUMBER WHERE PHOTO IS SHOWN

P1

CT-10-M-102

DESIGN DETAIL DESIGNATION

DESIGN DETAIL DESIGNATION (NUMERAL)

SHOWN ON DESIGN DETAIL DRAWING(S)

1234-567

NOTES:

1. ALL DESIGN DETAILS ARE TYPICAL AND MUST BE USED IF DESIGN DETAIL DESIGNATION IS NOT SHOWN
2. THE TERM STANDARD DETAIL, OR A FORM OF IT, IS SYNONYMOUS WITH DESIGN DETAIL. THE DESIGN DETAILS REPRESENT THE CHARACTER AND NATURE OF THE WORK REQUIRED THROUGHOUT THE PROJECT. ALL ASSOCIATED WORK SHALL BE IN ACCORDANCE WITH THE DESIGN DETAILS SHOWN WHETHER THE DETAILS ARE SPECIFICALLY REFERENCED OR NOT.

GENERAL NOTE:

1. THIS IS A STANDARD LEGEND SHEET. THEREFORE, NOT ALL OF THE INFORMATION SHOWN MAY BE USED ON THIS PROJECT.

NO.	DATE	REVISION	BY	APVD

DSGN	DR	CHK	APVD
E MINCHEW	M HALES	J HORTON	E MINCHEW

Jacobs
10 10TH STREET, SUITE 1400
ATLANTA, GA 30309
GA LIC # PEF000350 (EXP 6/30/2022)

CROSSTOWN AND SOUTH FAYETTE WTP
HOSELESS SOLIDS COLLECTION SYSTEM

FAYETTE COUNTY WATER SYSTEM
FAYETTE COUNTY, GEORGIA

GENERAL

DRAWING INDEX, LOCATION MAP, GENERAL LEGEND

REUSE OF DOCUMENTS: THIS DOCUMENT, AND THE IDEAS AND DESIGNS INCORPORATED HEREIN, AS AN INSTRUMENT OF PROFESSIONAL SERVICE, IS THE PROPERTY OF JACOBS AND IS NOT TO BE USED, IN WHOLE OR IN PART, FOR ANY OTHER PROJECT WITHOUT THE WRITTEN AUTHORIZATION OF JACOBS.

© JACOBS 2021. ALL RIGHTS RESERVED.

VERIFY SCALE

BAR IS ONE INCH ON ORIGINAL DRAWING.
0 1"

DATE	MARCH 2021
PROJ	D3101212
DWG	01-G-001
SHEET	1 of 36

BID DOCUMENTS

GENERAL SITE NOTES:

1. EXISTING BASE MAPPING SHOWN CONSIST OF COMPILATION OF THE FOLLOWING:
   - TOPOGRAPHY DRAWINGS FROM MALLET AND ASSOCIATES, PERFORMED IN OCTOBER 1998,
   - SITE VISITS OBSERVATIONS AND RECORD DRAWINGS

   EXISTING CONDITIONS MAY VARY TO THOSE SHOWN ON THESE PLANS. THE CONTRACTOR SHALL VERIFY EXISTING CONDITIONS AND ADJUST WORK PLAN ACCORDINGLY PRIOR TO BEGINNING CONSTRUCTION.
2. EXISTING TOPOGRAPHY, STRUCTURES, AND SITE FEATURES ARE SHOWN SCREENED AND/OR LIGHT-LINED. NEW FINISH GRADE, STRUCTURES, AND SITE FEATURES ARE SHOWN HEAVY-LINED. EXCEPTION TO THIS ARE THE DEMOLITION PLANS THAT SHOW EXISTING CONDITION BOLD OR HEAVY-LINED.
3. HORIZONTAL DATUM: NAD 83
   VERTICAL DATUM: NAVD 88
   COORDINATE SYSTEM: STATE PLANE - GEORGIA WEST, ZONE 1002, SURVEY FOOT
   DIMENSIONS SHOWN ARE IN U.S. SURVEY FEET.
4. MAINTAIN, RELOCATE, OR REPLACE EXISTING SURVEY MONUMENTS, CONTROL POINTS, AND STAKES WHICH ARE DISTURBED OR DESTROYED. PERFORM THE WORK TO PRODUCE THE SAME LEVEL OF ACCURACY AS THE ORIGINAL MONUMENT(S) IN A TIMELY MANNER, AND AT THE CONTRACTOR'S EXPENSE.
5. ALL ELEVATIONS SHOWN REFER TO NAVD 88. ELEVATIONS GIVEN ARE TO FINISH GRADE UNLESS OTHERWISE SHOWN.
6. CONTRACTOR SHALL PROVIDE AND MAINTAIN PLANT ROADS ACCESSIBLE AT ALL TIMES. TEMPORARY CLOSURE OF PLANT ROAD SHALL BE COORDINATED WITH PLANT OPERATOR.
7. THE ESCAPE OF SEDIMENT FROM THE SITE SHALL BE PREVENTED BY THE INSTALLATION OF EROSION AND SEDIMENT CONTROL MEASURES AND PRACTICES PRIOR TO, AND CONCURRENT WITH ANY LAND-DISTURBING ACTIVITIES.
8. ALL DISTURBED AREAS NOT RECEIVING A HARD SURFACE SHALL BE COVERED WITH COMMON BERMUDA GRASS UNLESS OTHERWISE SHOWN IN THE PLANS.
9. CONTRACTOR SHALL BE RESPONSIBLE FOR IMPLEMENTING AND MAINTAINING EROSION CONTROL DEVICES DURING CONSTRUCTION.
10. CONTRACTOR SHALL TAKE ALL OTHER MEASURES TO POSITIVELY PRECLUDE EROSION MATERIALS FROM LEAVING THE SITE.

FAYETTE COUNTY NOTES:

1. ALL IMPROVEMENTS TO CONFORM WITH FAYETTE COUNTY CONSTRUCTION STANDARDS AND SPECIFICATIONS, LATEST EDITION.
2. NO STRUCTURES, FENCES OR OTHER OBSTRUCTIONS MAY BE LOCATED WITHIN A DRAINAGE OR ACCESS EASEMENT WITHOUT PRIOR APPROVAL BY THE FAYETTE COUNTY DEPARTMENT OF ENGINEERING.
3. APPROVAL OF THESE PLANS DOES NOT CONSTITUTE APPROVAL BY FAYETTE COUNTY OF ANY LAND DISTURBING ACTIVITIES WITHIN WETLANDS AREAS. IT IS THE RESPONSIBILITY OF THE PROPERTY OWNER TO CONTACT THE APPROPRIATE REGULATORY AGENCY FOR APPROVAL OF ANY WETLAND AREA DISTURBANCE.
4. APPROVAL OF THESE PLANS BY FAYETTE COUNTY IS SUBJECT TO, AND CONTINGENT UPON THE APPLICANT OBTAINING ANY AND ALL NECESSARY APPROVALS FROM ANY AND ALL APPLICABLE AGENCIES INCLUDING, BUT NOT LIMITED TO THE UNITED STATES ARMY CORPS OF ENGINEERS, THE UNITED STATES ENVIRONMENTAL PROTECTION AGENCY, THE USDA-NRCS, GEORGIA DEPARTMENT OF NATURAL RESOURCES, GEORGIA ENVIRONMENTAL PROTECTION DIVISION, AND THE GEORGIA SOIL AND WATER CONSERVATION COMMISSION.
5. MAXIMUM CUT SLOPES SHALL BE 2 HORIZONTAL TO 1 VERTICAL. CONTINUOUS FILL SLOPES TEN (10) FEET IN HEIGHT OR LESS MAY BE 2 HORIZONTAL TO 1 VERTICAL. ALL CONTINUOUS FILL SLOPES THAT EXCEED TEN (10) FEET IN HEIGHT MUST BE 3 HORIZONTAL TO 1 VERTICAL UNLESS: (A) A MECHANICALLY ENGINEERING STABILIZED SLOPE IS APPROVED BY THE FAYETTE COUNTY DIRECTOR OF ENGINEERING; OR (B) THE DESIGNED AND CONSTRUCTED SLOPES ARE CERTIFIED BY A REGISTERED ENGINEER EXPERIENCED IN GEOTECHNICAL ENGINEERING AND LICENSED IN THE STATE OF GEORGIA.
6. ALL UNDISTURBED BUFFERS SHALL BE IDENTIFIED WITH ORANGE, FOUR-FOOT TREE-SAVE FENCING PRIOR TO ANY LAND DISTURBANCE (UDC SEC. 18-10.1)

CIVIL LEGEND

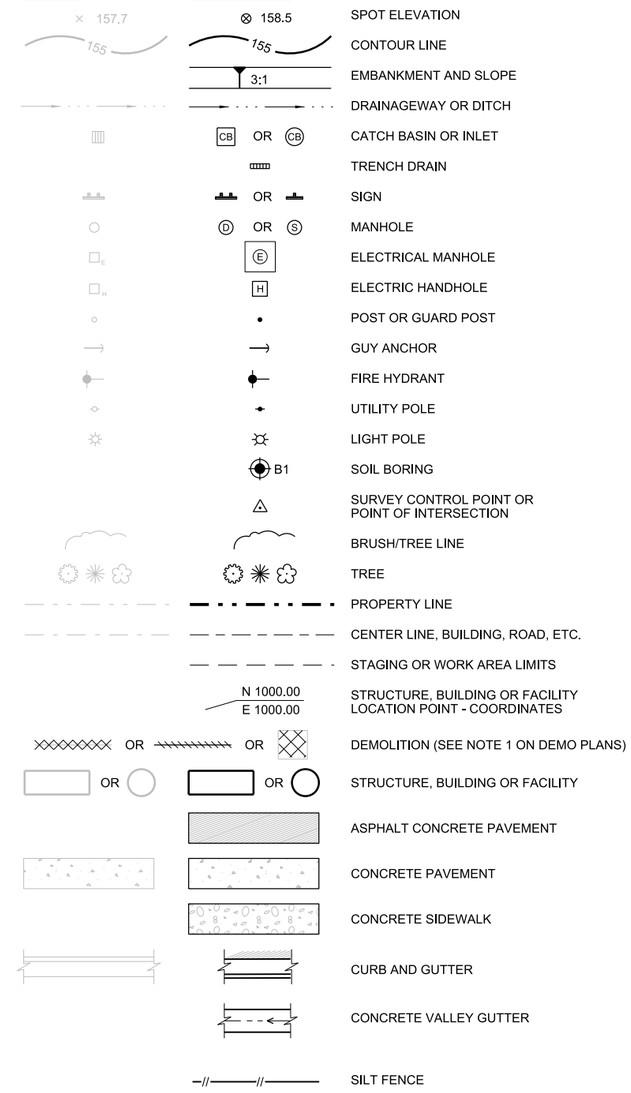

GENERAL YARD PIPING AND UTILITIES NOTES:

1. EXISTING UNDERGROUND UTILITIES SHOWN OBTAINED FROM RECORD DRAWINGS. NOT ALL UTILITIES ARE SHOWN. UNLESS OTHERWISE NOTED ALL UNDERGROUND FEATURES ARE SHOWN AT ASCE 38-02 QUALITY LEVEL D.

   ASCE 38-02 DEFINITIONS:
   QUALITY LEVEL D: INFORMATION DERIVED FROM EXISTING RECORDS.
   QUALITY LEVEL C: INFORMATION OBTAINED FROM SURVEYING ABOVE GROUND UTILITY FEATURES.
   QUALITY LEVEL B: INFORMATION OBTAINED FROM SURFACE GEOPHYSICAL METHODS, MARKED, SURVEYED (WITH TOLERANCES), AND MAPPED.
   QUALITY LEVEL A: PRECISE HORIZONTAL AND VERTICAL LOCATION KNOWN.
2. CONTRACTOR SHALL USE NON-DESTRUCTIVE METHODS (HAND-DIGGING, POTHOLING, ETC.) TO FIELD VERIFY DEPTH AND LOCATION OF EXISTING PIPING UNLESS OTHERWISE NOTED, PROTECT ALL EXISTING UTILITIES DURING CONSTRUCTION.
3. FOR PIPING LEGEND, SEE I&C LEGEND DRAWING OR SECTION 40 27 00, PIPING SCHEDULE.
4. UNLESS OTHERWISE SHOWN ALL PIPING SHALL HAVE A MINIMUM OF 3 FEET COVER.
5. ALL PIPES SHALL HAVE A CONSTANT SLOPE BETWEEN INVERT ELEVATIONS UNLESS A FITTING IS SHOWN.
6. MINIMUM ALLOWABLE CLEARANCE BETWEEN PIPES AT CROSSINGS SHALL BE 3".
   CONTROLLED LOW STRENGTH MATERIAL SUPPORT IS REQUIRED AT CROSSINGS LESS THAN 12".
7. FOR TRENCHING AND BACKFILL, SEE 3123-110
8. UNLESS OTHERWISE NOTED, ALL SURFACE RESTORATION OF TRENCHES SHALL BE COMPLETED PER DETAIL 3123-115

GENERAL NOTE:

1. THIS IS A STANDARD LEGEND SHEET. THEREFORE, NOT ALL OF THE INFORMATION SHOWN MAY BE USED ON THIS PROJECT.

NO.	DATE	REVISION	BY	APVD

DSGN	DR	CHK	APVD
D RATZLAFF	D RATZLAFF	D RATZLAFF	N MEADE

Jacobs
10 10TH STREET, SUITE 1400
ATLANTA, GA 30309
GA LIC # PEF000350 (EXP 6/30/2022)

CROSSTOWN AND SOUTH FAYETTE WTP
HOSELESS SOLIDS COLLECTION SYSTEM

FAYETTE COUNTY WATER SYSTEM
FAYETTE COUNTY, GEORGIA

GENERAL
CIVIL LEGEND

REUSE OF DOCUMENTS: THIS DOCUMENT, AND THE IDEAS AND DESIGNS INCORPORATED HEREIN, AS AN INSTRUMENT OF PROFESSIONAL SERVICE, IS THE PROPERTY OF JACOBS AND IS NOT TO BE USED, IN WHOLE OR IN PART, FOR ANY OTHER PROJECT WITHOUT THE WRITTEN AUTHORIZATION OF JACOBS.
© JACOBS 2021, ALL RIGHTS RESERVED.

BID DOCUMENTS

VERIFY SCALE
BAR IS ONE INCH ON ORIGINAL DRAWING.
0 1"

DATE	MARCH 2021
PROJ	D3101212
DWG	01-G-002
SHEET	2 of 36

DESIGN CRITERIA

1. APPLICABLE CODE: 2018 INTERNATIONAL BUILDING CODE (IBC), AS AMENDED BY THE STATE OF GEORGIA AND APPLICABLE LOCAL AGENCIES.
2. REFER TO THE DRAWINGS FOR ADDITIONAL AND SPECIFIC STRUCTURE LOADINGS AND REQUIREMENTS.
3. ALL LOADS SHOWN ARE SERVICE LEVEL (UNFACTORED) UNLESS SPECIFICALLY NOTED OTHERWISE.
4. DEAD LOADS:
   SELF WEIGHT
5. WIND LOADS:

BASIC WIND SPEED (3-SECOND GUST), Vult	= 120 MPH
NOMINAL WIND SPEED, Vasd	= 93 MPH
EXPOSURE CATEGORY	= C
CATEGORY	= III
IMPORTANCE FACTOR, Iw	= 1.00

6. SEISMIC LOADS:

MAPPED SPECTRAL RESPONSE ACCELERATIONS	
S_S	= 0.156g
S_1	= 0.08g
DESIGN SPECTRAL RESPONSE ACCELERATIONS	
S_{DS}	= 0.166g
S_{D1}	= 0.128g
SITE CLASS (ASSUMED)	= D
SEISMIC DESIGN CATEGORY	= B
IMPORTANCE FACTOR, Ie	= 1.25

GENERAL INFORMATION

1. FOR ABBREVIATIONS NOT LISTED, SEE ASME Y14.38 "ABBREVIATIONS AND ACRONYMS: PUBLICATION AS DISTRIBUTED BY THE AMERICAN SOCIETY OF MECHANICAL ENGINEERS (ASME).
2. FOR NUMBER, TYPE, SIZE, ARRANGEMENT, AND/OR LOCATION OF EQUIPMENT PADS, SEE OTHER DISCIPLINE DRAWINGS. COORDINATE WITH EQUIPMENT SUPPLIER PRIOR TO PLACING SLABS, WALLS AND FOUNDATIONS. COORDINATE PIPING OPENINGS WITH OTHER DISCIPLINE DRAWINGS.
3. DO NOT CUT OR MODIFY STRUCTURAL MEMBERS FOR PIPES, DUCTS, ETC, UNLESS SPECIFICALLY DETAILED OR APPROVED IN WRITING BY THE ENGINEER.
4. VISITS TO THE JOB SITE BY THE ENGINEER TO OBSERVE THE CONSTRUCTION DO NOT IN ANY WAY MEAN THAT ENGINEER IS GUARANTOR OF CONSTRUCTOR'S WORK, NOR RESPONSIBLE FOR THE COMPREHENSIVE OR SPECIAL INSPECTIONS, COORDINATION, SUPERVISION, OR SAFETY AT THE JOB SITE.
5. INFORMATION (DETAILING, DIMENSIONS, CONFIGURATIONS, AND ELEVATIONS, ETC.) OF EXISTING CONSTRUCTION SHOWN REFLECTS AVAILABLE EXISTING DESIGN DOCUMENTS, AND DOES NOT NECESSARILY REPRESENT THE AS-CONSTRUCTED CONDITIONS. THE CONTRACTOR SHALL FIELD VERIFY DIMENSIONS, ELEVATIONS AND DETAILING OF THE EXISTING STRUCTURES PRIOR TO UNDERTAKING ANY WORK THAT IS AFFECTED BY THE EXISTING STRUCTURE. NOTIFY ENGINEER IF CONDITIONS VARY FROM THAT SHOWN PRIOR TO STARTING WORK.

INSPECTION AND TESTING

1. SPECIAL INSPECTION DOES NOT INCLUDE OR WAIVE THE RESPONSIBILITY FOR INSPECTIONS REQUIRED BY THE BUILDING OFFICIAL. THE CONTRACTOR SHALL SCHEDULE BOTH INSPECTIONS.
2. SPECIFIED CONCRETE AND OTHER MATERIAL TESTING RELATED TO SPECIAL INSPECTION DURING CONSTRUCTION WILL BE OWNER FURNISHED.
3. SPECIFIED LABORATORY TEST MIXES AND SIMILAR TEST RESULTS TO VERIFY MATERIAL QUALITY AND CONFORMANCE TO SPECIFICATIONS, AND SUBMITTED FOR REVIEW PRIOR TO ACCEPTANCE FOR USE ON THE PROJECT, SHALL BE THE RESPONSIBILITY OF THE CONTRACTOR.

FORMWORK, SHORING, AND BRACING

1. CONTRACTOR IS RESPONSIBLE FOR WORK RELATING TO CONSTRUCTION ERECTION METHODS, BRACING, SHORING, RIGGING, GUYS, SCAFFOLDING, FORMWORK, AND OTHER WORK AIDS REQUIRED TO SAFELY PERFORM THE WORK SHOWN.

CONCRETE REPAIR AND CONSTRUCTION NOTES

1. THE SCOPE OF CONCRETE RECONSTRUCTION WORK, IS LIMITED TO REPAIR OF DEFECTIVE SURFACE LEFT FROM DEMOLISHED CONCRETE. EACH REPAIR SURFACE AREA SHALL BE FIELD VERIFIED BY CONTRACTOR. THE OWNER SHALL BE NOTIFIED (AND APPROVED) OF ADDITIONAL REPAIRS BEYOND DEMOLISHED AREA IDENTIFIED ON DRAWINGS. SEE 0330-143 FOR CONCRETE DEMOLITION.
2. CONCRETE SURFACE CONSTRUCTION:

   2.1. SAWCUT THE PERIMETER OF THE AREA BEING REPAIRED TO A MINIMUM DEPTH OF 3/4" TO PREVENT FEATHEREDGES. THE SAWCUT SHALL BE 90 DEGREES WITH EDGES PARALLEL AND NORMAL TO THE DIRECTION OF THE EXISTING STEEL REINFORCEMENT. THE STEEL REINFORCEMENT SHALL NOT BE DAMAGED.

   2.2. ABRADE THE SURFACE TO ACHIEVE A MINIMUM SURFACE PROFILE IN THE RANGE OF CSP-6 TO CSP-7 IN ACCORDANCE WITH ICRI GUIDELINE 310.2, OR AS RECOMMENDED BY REPAIR MATERIAL MANUFACTURER. TAKE PRECAUTIONS NECESSARY TO MINIMIZE MICROCRACKING OR BRUISING OF THE PREPARED CONCRETE SURFACE (REFER TO GUIDELINE 310.2).

   2.3. CONCRETE SURFACE SHALL BE FREE OF UNSOUND OR DELAMINATED CONCRETE, OIL, GREASE, LAITANCE, EFFLORESCENCE, DIRT, PROTECTIVE COATINGS, AND OTHER CONTAMINANTS THAT MAY AFFECT THE BOND BETWEEN THE BASE AND REPAIR MATERIAL.

   2.4. PRESOAK THE EXISTING PREPARED CONCRETE SURFACE TO A SATURATED SURFACE-DRY (SSD) CONDITION, OR APPLY BONDING AGENT IN ACCORDANCE WITH THE MANUFACTURER'S RECOMMENDATION.
3. CONCRETE SURFACE REPAIR:

   3.1. REPAIR MATERIAL SHALL BE SIKATOP 123 PLUS BY SIKA CORP., LYNDHURST, NJ;AS.

   3.2. CONTRACTOR SHALL FOLLOW MANUFACTURER RECOMMENDATIONS FOR THE PLACEMENT OF THE REPAIR MATERIAL.

   3.3. CONTRACTOR SHALL SUBMIT REPAIR MORTAR SYSTEM APPLICATOR QUALIFICATIONS, PROPOSED EQUIPMENT AND METHOD OF INSTALLATION TO THE OWNER FOR APPROVAL. APPLICATOR SHALL BE CERTIFIED BY MANUFACTURER.

   3.4. IF REBAR IS EXPOSED, CLEAN STEEL TO SSPC-4, WITH WIRE BRUSH OR BY ABRASIVE BLASTING.

   3.5. TROWEL ON GROUT OVER SPALL IN ACCORDANCE WITH MANUFACTURER'S SPECIFICATIONS. IF REPAIR THICKNESS IS GREATER THAN MAXIMUM TROWEL THICKNESS, APPLY NUMBER OF LIFTS AS REQUIRED. FOLLOW MANUFACTURER'S WRITTEN RECOMMENDATION FOR CURING BETWEEN LIFTS. ALLOW AT LEAST 6 HOURS BETWEEN LIFTS UNLESS MANUFACTURER'S SPECIFICATIONS INDICATE MORE. IF REBAR IS EXPOSED, ENSURE AT LEAST 2" COVER.

   3.6. CURE REPAIR MATERIAL IN ACCORDANCE WITH SPECIFICATIONS.
4. SCHEDULE AND CONDUCT PRE-REPAIR-CONFERENCE PRIOR TO WORK. ATTENDEES SHALL INCLUDE CONTRACTOR, APPLICATOR, TECHNICAL REPRESENTATIVE OF REPAIR MATERIAL MANUFACTURER AND OWNER. MANUFACTURER REPRESENTATIVE SHALL CONFIRM MATERIAL SELECTION AND REVIEW PROPOSED SURFACE PREPARATION, MATERIAL APPLICATION, CONSOLIDATION, FINISHING, CURING, AND PROTECTION OF REPAIR MATERIAL FROM WEATHER CONDITIONS.

CAST IN PLACE CONCRETE

1. CONCRETE WORK SHALL CONFORM TO THE REQUIREMENTS OF AC1 318 AND 301 IN ADDITION TO THE FOLLOWING PUBLICATIONS AS APPLICABLE AND AS NOTED BELOW:

   - ACI 300R RECOMMENDED PRACTICE FOR HOT WEATHER CONCRETING (TEMPERATURE OF CONCRETE AT PLACEMENT SHALL NOT EXCEED 90°).

   -ACI 306.1 STANDARD SPECIFICATIONS FOR COLD WEATHER CONCRETING.

   -ACI 347 RECOMMENDED PRACTICE FOR CONCRETE FORM WORK.

   -ACI 308.1 - SPECIFICATION OF CURING CONCRETE.
2. CONCRETE MIX DESIGN:

   2.1. LIMIT WATER TO CEMENTITIOUS MATERIALS RATIO (W/CM) TO MAXIMUM VALUE OF 0.40.

   2.2. MINIMUM CONCRETE COMPRESSIVE STRENGTH (F'C) SHALL BE 4,500 PSI AT 28 DAYS.

   2.3. PROVIDE AIR CONTENT BASED ON NOMINAL MAXIMUM SIZE OF AGGREGATE AS FOLLOWS:

   2.4. CEMENT SHALL CONFORM TO ASTM C 150, TYPE I OR II. INCLUSION OF SUPPLEMENTARY CEMENTITIOUS MATERIALS IN DESIGN MIX IS OPTIONAL.

   2.5. PROVIDE MINIMUM 600 POUNDS PER CUBIC YARD OF CEMENTITIOUS MATERIALS CONTENT IN MIX.

   2.6. LIMIT WATER-SOLUBLE, CHLORIDE-ION CONTENT IN HARDENED CONCRETE TO 0.10 PERCENT BY WEIGHT OF CEMENT.

   2.7. CONCRETE AGGREGATES SHALL CONFORM TO THE REQUIREMENTS OF ASTM C 33.

   2.8. ONLY ADMIXTURES WITH ASTM IS PERMITTED AND SHALL BE USED AS RECOMMENDED BY MANUFACTURER AND COMPATIBLE WITH OTHER MIX CONSTITUENTS. DO NOT USE CALCIUM CHLORIDE AS AN ADMIXTURE.

   2.9. TARGETED CONCRETE SLUMP NOT TO EXCEED 9 INCHES. MINIMUM OF 2 INCHES PRIOR TO ADDING WATER-REDUCING OR A PLASTICIZING ADMIXTURE.

   2.10. SUBMIT MIX DESIGN SIGNED BY CERTIFIED NRMCA CONCRETE TECHNOLOGIST LEVEL 2 OR DOT CERTIFIED MIX DESIGNER. CONCRETE MIX DESIGNS AND ADMIXTURES SHALL BE APPROVED BY THE ENGINEER 14 DAYS PRIOR TO FIRST CONCRETE PLACEMENT.
3. CONCRETE STRENGTH TEST:

   3.1. UNLESS OTHERWISE SPECIFIED, ONE SPECIMEN AT AGE OF 7 DAYS FOR INFORMATION, AND TWO 6 INCH DIAMETER OR WHEN PERMITTED THREE 4 INCH DIAMETER TEST SPECIMENS AT AGE OF 28 DAYS FOR ACCEPTANCE.

   3.2. IF RESULT OF 7 DAY CONCRETE STRENGTH TEST IS LESS THAN 50 PERCENT OF SPECIFIED 28 DAY STRENGTH, EXTEND PERIOD OF MOIST CURING BY 7 ADDITIONAL DAYS.

   3.3. PROVIDE A MINIMUM OF ONE SPARE TEST SPECIMEN PER SAMPLE. TEST SPARE CYLINDER AS DIRECTED BY OWNER.
4. REINFORCING BARS SHALL CONFORM TO ASTM-A615 GRADE 60.

WELDING

1. WELDS SHALL CONFORM TO AMERICAN WELDING SOCIETY (AWS):
   D1.1, STRUCTURAL WELDING CODE STEEL
   D1.2, STRUCTURAL WELDING CODE ALUMINUM
   D1.6, STRUCTURAL WELDING CODE STAINLESS STEEL
2. REPAIR WELDS FOUND DEFECTIVE IN ACCORDANCE WITH AWS D1.1 SECTION 5.26.
3. USE INTERMITTENT WELDS AT FIELD WELDS OF EMBED PLATES AND ANGLES TO AVOID SPALLING OR CRACKING OF THE EXISTING CONCRETE.
4. BUTT JOINT WELDS SHALL BE COMPLETE JOINT PENETRATION (CJP) UNLESS INDICATED OTHERWISE.

STRUCTURAL STEEL AND METAL FABRICATIONS

1. ALUMINUM SHALL CONFORM TO THE FOLLOWING ASTM STANDARDS:

STRUCTURAL SHAPES	B308
PLATES	B209

2. STRUCTURAL STEEL SHALL BE FABRICATED AND ERECTED IN CONFORMANCE WITH THE AISC MANUAL OF STEEL CONSTRUCTION, CURRENT EDITION, AND CURRENT OSHA STANDARDS.
3. FASTENERS (INCLUDING ANCHOR BOLTS)SHALL BE HIGH STRENGTH BOLTS CONFORMING TO THE FOLLOWING ASTM STANDARDS EXCEPT WHERE SPECIFICALLY INDICATED OTHERWISE:

   STAINLESS STEEL F593, AISI TYPE 316, CONDITION CW
4. ITEMS TO BE EMBEDDED IN CONCRETE SHALL BE CLEAN AND FREE OF OIL, DIRT AND PAINT.
5. NO HOLES OTHER THAN THOSE SPECIFICALLY DETAILED SHALL BE ALLOWED THROUGH STRUCTURAL STEEL MEMBERS. NO CUTTING OR BURNING OF STRUCTURAL STEEL IS PERMITTED WITHOUT THE APPROVAL OF THE ENGINEER.

DEFERRED SUBMITTALS

1. DEFERRED SUBMITTALS ARE THOSE PORTIONS OF THE DESIGN WHICH ARE NOT SUBMITTED AT THE TIME OF PERMIT APPLICATION AND WHICH ARE TO BE SUBMITTED TO THE PERMITTING AGENCY FOR ACCEPTANCE PRIOR TO INSTALLATION OF THAT PORTION OF THE WORK OR ARE REQUIRED TO BE SUBMITTED FOR REVIEW ONLY BY THE ENGINEER.
2. WHERE DEFERRED SUBMITTALS INCLUDE ADDITIONAL MATERIALS, INSTALLATION, ANCHORAGE, OR CERTIFICATION OF COMPONENTS THAT REQUIRE SPECIAL INSPECTION AND/OR STRUCTURAL OBSERVATION TO MEET CODE REQUIREMENTS, THE DEFERRED SUBMITTAL SHALL INCLUDE SPECIFIC LINE ITEMS TO BE ADDED TO THE APPROPRIATE TABLES IN THE PROJECT'S STATEMENT OF SPECIAL INSPECTIONS PLAN IF THEY ARE NOT ALREADY IDENTIFIED.
3. THE FOLLOWING IS A LIST OF DEFERRED SUBMITTALS PER IBC SECTION107.3.4.1 OF 2018 IBC THAT ARE EXPECTED TO CONTAIN STRUCTURAL CALCULATIONS OR SAFETY RELATED SYSTEM INFORMATION FOR REVIEW TO MEET BUILDING PERMITTING REQUIREMENTS FOR DESIGNED SYSTEMS. PRIOR TO INSTALLATION OF THE INDICATED STRUCTURAL ELEMENT, EQUIPMENT, DISTRIBUTION SYSTEM, OR COMPONENT OR ITS ANCHORAGE, THE CONTRACTOR SHALL SUBMIT THE REQUIRED CALCULATIONS AND SUPPORTING DATA AND DRAWINGS FOR REVIEW AND ACCEPTANCE BY THE ENGINEER. ADDITIONALLY, ACCEPTANCE INDICATED ON THE ENGINEER'S COMMENT FORM, ALONG WITH THE COMPLETED, FINAL SUBMITTAL SHALL THEN BE SUBMITTED BY THE CONTRACTOR TO THE PERMITTING AGENCY AND APPROVED PRIOR TO INSTALLATION OF THESE ITEMS.

SPECIFICATION SECTION	CODE REQUIRED DEFERRED SUBMITTALS FOR REVIEW BY PERMITTING AGENCY
01 88 15	ANCHORAGE AND BRACING
OTHER	ANY EQUIPMENT OR COMPONENT IN WHICH A TECHNICAL SPECIFICATION REQUIRES SUBMITTAL OF EQUIPMENT OR ANCHORAGE SYSTEM CALCULATIONS

NO.	DATE	REVISION	BY	APVD

DSGN G ADANDEDJAN | DR M HALES | CHK R KOEKEMOER | APVD R KOEKEMOER

© JACOBS 2021, ALL RIGHTS RESERVED.

Jacobs
10 10TH STREET, SUITE 1400
ATLANTA, GA 30309
GA LIC # PEF000350 (EXP 6/30/2022)

CROSSTOWN AND SOUTH FAYETTE WTP
HOSELESS SOLIDS COLLECTION SYSTEM

FAYETTE COUNTY WATER SYSTEM
FAYETTE COUNTY, GEORGIA

GENERAL
STRUCTURAL NOTES

REUSE OF DOCUMENTS: THIS DOCUMENT, AND THE IDEAS AND DESIGNS INCORPORATED HEREIN, AS AN INSTRUMENT OF PROFESSIONAL SERVICE, IS THE PROPERTY OF JACOBS AND IS NOT TO BE USED, IN WHOLE OR IN PART, FOR ANY OTHER PROJECT WITHOUT THE WRITTEN AUTHORIZATION OF JACOBS.

BID DOCUMENTS

VERIFY SCALE
BAR IS ONE INCH ON ORIGINAL DRAWING.
0 1"

DATE	MARCH 2021
PROJ	D3101212
DWG	01-G-003
SHEET	3 of 36

DOUBLE LINE	SINGLE LINE	
		EXISTING PIPE
		NEW PIPE
		EXISTING PIPE TO BE ABANDONED
		EXISTING PIPE TO BE REMOVED
		WELDED JOINT
		GROOVED END JOINT
		FLANGED JOINT
		MECHANICAL JOINT/ PROPRIETARY RESTRAINED JOINT
		PROPRIETARY RESTRAINED JOINT
		BELL & SPIGOT JOINT (LEADED)
		HUB & SPIGOT JOINT (RUBBER GASKET)
		BALL JOINT
		ADAPTER SIDE GROOVED END ADAPTER FLANGE
		FLANGED COUPLING ADAPTER
		FLEXIBLE COUPLING
		METAL BELLOWS EXP JOINT
		ELASTOMER BELLOWS EXP JOINT
		ELBOW UP
		ELBOW DOWN
		TEE UP
		TEE DOWN
		LATERAL UP
		LATERAL DOWN
		CONCENTRIC REDUCER
		ECCENTRIC REDUCER

DOUBLE LINE	SINGLE LINE	
		REDUCING BUSHING
		UNION
		CAP
		ANCHOR
		ELBOW, 90 DEGREE
		CROSS
		TEE
		ELBOW, 45 DEGREE
		LATERAL

PIPE AND FITTING END PATTERNS

B	BELL	PE	PLAIN END
S	SPIGOT	GE	GROOVED END
F	FLANGE	MJ	MECHANICAL JOINT

EXAMPLE: F MJ PE

MISCELLANEOUS SYMBOLS

FLEXIBLE (ELASTOMER) PIPE CONNECTION

HOSE VALVE (HV- X) OR (V-X)
X = NO. IN SPECS

GATE

KNIFE GATE OR

BUTTERFLY OR

GLOBE OR

BALL OR

SEATING PORT

ECCENTRIC PLUG OR

PLUG OR COCK OR

NEEDLE OR

DIAPHRAGM OR

PINCH OR

SWING CHECK OR

BALL CHECK OR

VALVE DESIGNATIONS

MANUAL VALVES AND CHECK VALVES

8"-V500

SIZE OF VALVE

VALVE DESIGNATION

VALVE TYPE, SEE SPECIFICATIONS

ACTUATED, SELF-REGULATED AND AIR RELEASE VALVES

SEE I&C LEGENDS FOR VALVE TAGGING BASIS AND SECTION 40 27 02 FOR VALVE SCHEDULES. NOTE THAT VALVES PROVIDED AS PART OF VENDOR PACKAGES MAY NOT BE SHOWN IN THE VALVE SCHEULES, SEE THE ASSOCIATED EQUIPMENT SPECIFICATION FOR DETAILS.

NOTES

1. SEE PIPING SPECIFICATIONS FOR PIPING AND JOINT MATERIALS & TYPES.
2. SYMBOLS SHOWN HERE FOR SINGLE LINE FITTINGS ARE GENERIC ONLY. REFER TO PIPING SPECIFICATIONS FOR SPECIFIC END CONNECTIONS FOR SINGLE LINE PIPE AND FITTINGS.
3. UNLESS OTHERWISE INDICATED, EXISTING PIPING AND EQUIPMENT IS SHOWN LIGHT-LINED AND/OR SCREENED AND IS NOTED AS EXISTING. NEW PIPING AND EQUIPMENT IS SHOWN HEAVY-LINED.
4. ONLY FLANGED END CONNECTIONS ARE SHOWN HERE FOR DOUBLE LINE FITTINGS. FITTINGS WITH OTHER END PATTERNS ARE SHOWN SIMILARLY ON THE CONSTRUCTION DRAWINGS. ALSO SEE PIPING SPECIFICATIONS.
5. PIPING DESIGNATION EXAMPLE:

16" TSL

16" TSL

SERVICE, SEE SPECIFICATIONS FOR PIPE SCHEDULE WITH ABBREVIATION LEGEND

MECHANICAL LEGEND AND NOTES

GENERIC NOTES

1. LAY PIPE TO UNIFORM GRADE BETWEEN INDICATED ELEVATION POINTS.
2. SIZE OF FITTINGS SHOWN ON DRAWINGS SHALL CORRESPOND TO ADJACENT STRAIGHT RUN OF PIPE, UNLESS OTHERWISE INDICATED. TYPE OF JOINT AND FITTING MATERIAL SHALL BE THE SAME AS SHOWN FOR ADJACENT STRAIGHT RUN OF PIPE.
3. LOCATION AND NUMBER OF PIPE HANGERS AND PIPE SUPPORTS SHOWN IS ONLY APPROXIMATE. CONTRACTOR SHALL DESIGN SUPPORTS AS SPECIFIED.
4. ALL JOINTS SHALL BE WATERTIGHT. WALL PIPES SHALL BE USED WHEREVER PIPING PASSES FROM A STRUCTURE TO BACKFILL.
5. ALL FLEXIBLE CONNECTORS AND COUPLING ADAPTERS SHALL BE PROVIDED WITH THRUST PROTECTION AS SPECIFIED, UNLESS OTHERWISE NOTED. THRUST PROTECTION SHALL BE ADEQUATE FOR TEST PRESSURES SPECIFIED.
6. SYMBOLS, LEGENDS, AND PIPE USE IDENTIFICATIONS SHOWN SHALL BE FOLLOWED THROUGHOUT THE DRAWINGS, WHEREVER APPLICABLE. NOT ALL OF THE VARIOUS PIPING COMPONENTS ARE NECESSARILY USED IN THE PROJECT.
7. ALL BURIED PIPING SPECIFIED TO BE PRESSURE TESTED, EXCEPT FLANGED, WELDED, OR SCREWED PIPING, SHALL BE PROVIDED WITH THRUST RESTRAINTS. ALL CONNECTIONS TO EXISTING PIPE SHALL BE MADE WITH MEGALUGS.
8. NUMBER AND LOCATION OF UNIONS SHOWN ON DRAWINGS IS ONLY APPROXIMATE. PROVIDE ALL UNIONS NECESSARY TO FACILITATE CONVENIENT REMOVAL OF VALVES AND MECHANICAL EQUIPMENT.
9. WHERE A GROOVED END COUPLING IS SHOWN, IT SHALL BE THE RIGID JOINT TYPE, UNLESS OTHERWISE SPECIFIED. WHERE A FLANGED COUPLING ADAPTER IS SHOWN, A STANDARD FLANGE SHALL BE JOINED TO THE COUPLING ADAPTER.
10. ALL PIPELINES LEAVING FACILITIES AND / OR CONCRETE ENCASEMENT SHALL INCORPORATE FLEXIBILITY FEATURES AS SPECIFIED IN SECTION 40 27 00 AND SECTION 40 27 01. IN SOME CASES, PIPING JOINTS OUTSIDE FACILITIES ARE SHOWN ON DRAWINGS. PIPING FLEXIBILITY FEATURES SHALL BE INCORPORATED AS SPECIFIED REGARDLESS OF WHETHER OR NOT THEY ARE SHOWN ON A DRAWING.
11. ALL NEW W1 WATER PIPES MUST BE PROPERLY FLUSHED, PRESSURE TESTED, CHLORINATED AND BACTERIOLOGICALLY TESTED, AS SPECIFIED.

NO.	DATE	REVISION	BY	APVD

DSGN E MINCHEW DR E MINCHEW CHK M HALES APVD J HORTON

Jacobs
10 10TH STREET, SUITE 1400
ATLANTA, GA 30309
GA LIC # PEF000350 (EXP 6/30/2022)

CROSSTOWN AND SOUTH FAYETTE WTP
HOSELESS SOLIDS COLLECTION SYSTEM
FAYETTE COUNTY WATER SYSTEM
FAYETTE COUNTY, GEORGIA

GENERAL
PROCESS MECHANICAL LEGEND

REUSE OF DOCUMENTS: THIS DOCUMENT, AND THE IDEAS AND DESIGNS INCORPORATED HEREIN, AS AN INSTRUMENT OF PROFESSIONAL SERVICE, IS THE PROPERTY OF JACOBS AND IS NOT TO BE USED, IN WHOLE OR IN PART, FOR ANY OTHER PROJECT WITHOUT THE WRITTEN AUTHORIZATION OF JACOBS.
© JACOBS 2021. ALL RIGHTS RESERVED.

VERIFY SCALE
BAR IS ONE INCH ON ORIGINAL DRAWING.
0 1"

DATE	MARCH 2021
PROJ	D3101212
DWG	01-G-004
SHEET	4 of 36

BID DOCUMENTS

INSTRUMENT IDENTIFICATION

EXAMPLE SYMBOLS

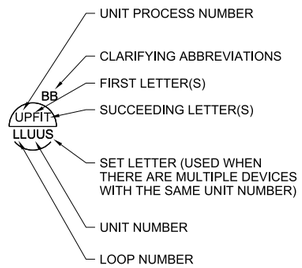

DIGITAL SYSTEM INTERFACES

- ▲ ANALOG INPUT
- ▼ ANALOG OUTPUT
- $\triangle_X$ DISCRETE INPUT
- ∇_X DISCRETE OUTPUT

INSTRUMENT IDENTIFICATION LETTERS TABLE

	FIRST-LETTER		SUCCEEDING-LETTERS		
LETTER	PROCESS OR INITIATING VARIABLE	MODIFIER	READOUT OR PASSIVE FUNCTION	READOUT OR PASSIVE FUNCTION	READOUT OR PASSIVE FUNCTION
A	ANALYSIS (+)		ALARM		
B	BURNER, COMBUSTION		USER'S CHOICE (*)	USER'S CHOICE (*)	USER'S CHOICE (*)
C	USER'S CHOICE (*)			CONTROL	
D	DENSITY (S.G.)	DIFFERENTIAL			
E	VOLTAGE		PRIMARY ELEMENT, SENSOR		
F	FLOW RATE	RATIO (FRACTION)			
G	USER'S CHOICE (*)		GLASS, GAUGE VIEWING DEVICE	GATE	
H	HAND (MANUAL)				HIGH
I	CURRENT (ELECTRICAL)		INDICATE		
J	POWER	SCAN			
K	TIME, TIME SCHEDULE	TIME RATE OF CHANGE		CONTROL STATION	
L	LEVEL		LIGHT (PILOT)		LOW
M	MOTION	MOMENTARY			MIDDLE, INTERMEDIATE
N	TORQUE		USER'S CHOICE (*)	USER'S CHOICE (*)	USER'S CHOICE (*)
O	USER'S CHOICE (*)		ORIFICE, RESTRICTION		
P	PRESSURE, VACUUM		POINT (TEST) CONNECTION		
Q	QUANTITY	INTEGRATE, TOTALIZE			
R	RADIATION		RECORD OR PRINT		
S	SPEED, FREQUENCY	SAFETY		SWITCH	
T	TEMPERATURE			TRANSMIT	
U	MULTI VARIABLE		MULTI FUNCTION	MULTI FUNCTION	MULTI FUNCTION
V	VIBRATION, MECHANICAL ANALYSIS			VALVE, DAMPER, LOUVER	
W	WEIGHT, FORCE		WELL		
X	UNCLASSIFIED (*)	X AXIS	UNCLASSIFIED (*)	UNCLASSIFIED (*)	UNCLASSIFIED (*)
Y	EVENT, STATE OR PRESENCE	Y AXIS		RELAY, COMPUTE, CONVERT	
Z	POSITION	Z AXIS		DRIVE, ACTUATOR, UNCLASSIFIED FINAL CONTROL ELEMENT	

TABLE BASED ON THE INTERNATIONAL SOCIETY OF AUTOMATION (ISA) STANDARD.

(+) WHEN USED, EXPLANATION IS SHOWN ADJACENT TO INSTRUMENT SYMBOL. SEE ABBREVIATIONS AND LETTER SYMBOLS.
(*) WHEN USED, DEFINE THE MEANING HERE FOR THE PROJECT.

GENERAL INSTRUMENT OR FUNCTIONAL SYMBOLS

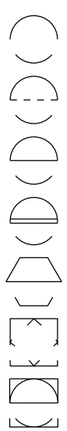

- FIELD MOUNTED
- REAR-OF-PANEL MOUNTED (OPERATOR INACCESSIBLE)
- PANEL MOUNTED (OPERATOR ACCESSIBLE)
- MCC MOUNTED
- COMPUTER FUNCTION
- PLC FUNCTION
- SHARED DISPLAY, SHARED CONTROL

TRANSDUCERS

A	ANALOG	I	CURRENT
D	DIGITAL	P	PNEUMATIC
E	VOLTAGE	PF	PULSE FREQUENCY
F	FREQUENCY	PD	PULSE DURATION
H	HYDRAULIC	R	RESISTANCE

EXAMPLE

CURRENT TO PNEUMATIC TRANSDUCER (BACK OF PANEL, IN A FLOW LOOP)

ACCESSORY DEVICES

A	ALARM
C	CONTROLLER
I	INDICATOR
R	RECORDER
S	SWITCH
T	TRANSMITTER
X	UNCLASSIFIED

EXAMPLE

TRANSMITTER AS AN ACCESSORY TO A FLOW ELEMENT

SPECIAL CASES

ON AND OFF EVENT LIGHTS

ON-OFF HAND SWITCH, MAINTAINED CONTACT SWITCH (CONTROLLED DEVICE WILL RESTART ON RETURN OF POWER AFTER POWER FAILURE).

STOP-START HAND SWITCH MOMENTARY CONTACT SWITCHES (CONTROLLED DEVICE WILL NOT RESTART ON RETURN OF POWER AFTER POWER FAILURE).

LINE LEGEND

- PRIMARY PROCESS (CLOSED CONDUIT, DASHED LINE INDICATES ALTERNATE FLOW STREAM)
- SECONDARY PROCESS
- BYPASS PROCESS
- PROCESS (OPEN CHANNEL)
- ANALOG SIGNAL (4 TO 20 mAdc, ETC.)
- DISCRETE (ON/OFF, ETC.)
- PNEUMATIC SIGNAL
- FILLED SYSTEM SIGNAL
- HYDRAULIC SYSTEM SIGNAL
- DATA LINK
- BUILDING OR FACILITY BOUNDARY
- PACKAGE SYSTEM EQUIPMENT
- TYPICAL BREAK
- POWER
- MSC — MANUFACTURER'S SUPPLIED CABLE

PARALLELING LINES

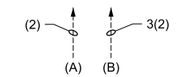

(A) TOTAL OF 2 SIGNALS

(B) 3 TYPICAL SETS OF 2 SIGNALS EACH. TOTAL OF 6 SIGNALS.

CONNECTING LINES

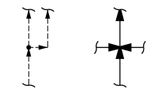

NON-CONNECTING LINES

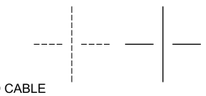

INTERFACE SYMBOLS

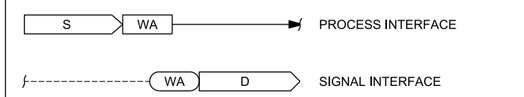

W	SOURCE UNIT PROCESS NO. (1 OR 2 DIGITS)
A	INTERFACE NO. (2 DIGITS)
D	DESTINATION DRAWING NO.
S	SOURCE DRAWING NO.

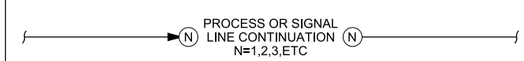

SELF CONTAINED VALVE & EQUIPMENT TAG NUMBERS

W-D-X-Y

W		UNIT PROCESS NUMBER
D	ARV	AIR RELEASE VALVE
	AVRV	AIR AND VACUUM RELEASE VALVE
	E	EJECTOR
	G	GATE
	M	MECHANICAL EQUIPMENT
	P	PUMP
	T	TANK
X		LOOP NUMBER
Y		UNIT NUMBER

ABBREVIATIONS & LETTER SYMBOLS

AC	ALTERNATING CURRENT
AFD	ADJUSTABLE FREQUENCY DRIVE
AM	AUTO-MANUAL
CAM	COMPUTER-AUTO-MANUAL
CCS	CENTRAL CONTROL SYSTEM
CL_2 etc.	CHLORINE (TYPICAL: USE STANDARD CHEMICAL ELEMENT ABBREVIATIONS)
CM	COMPUTER-MANUAL
COD	CHEMICAL OXYGEN DEMAND
CP-X	CONTROL PANEL NO. X
DC	DIRECT CURRENT
DCS	DISTRIBUTED CONTROL SYSTEM
DCU	DISTRIBUTED CONTROL UNIT
DO	DISSOLVED OXYGEN
ENSW	ETHERNET SWITCH
FCL_2	FREE CHLORINE RESIDUAL
FOPP	FIBER OPTIC PATCH PANEL
FOS	FAST-OFF-SLOW
FOSA	FAST-OFF-SLOW-AUTO
FOSR	FAST-OFF-SLOW-REMOTE
FP-W-X	FIELD PANEL NO. WX (W=UNIT PROCESS NUMBER X=PANEL NUMBER)
FR	FORWARD-REVERSE
HOA	HAND-OFF-AUTO
HOR	HAND-OFF-REMOTE
ISR	INTRINSICALLY SAFE RELAY
LEL	LOWER EXPLOSIVE LIMIT
LOS	LOCKOUT STOP
LR	LOCAL-REMOTE
MA	MANUAL-AUTO
MC	MODULATE-CLOSE
MCC-X	MOTOR CONTROL CENTER NO. X
MSC	MANUFACTURER SUPPLIED CABLE
OC	OPEN-CLOSE(D)
OCA	OPEN-CLOSE-AUTO
OCR	OPEN-CLOSE-REMOTE
OO	ON-OFF
OOA	ON-OFF-AUTO
OOR	ON-OFF-REMOTE
ORP	OXIDATION REDUCTION POTENTIAL
OSC	OPEN-STOP-CLOSE
pH	HYDROGEN ION CONCENTRATION
PLC	PROGRAMMABLE LOGIC CONTROLLER
RIO	REMOTE I/O UNIT
RM-X	REMOTE MULTIPLEXING MODULE NO. X
RTU-X	REMOTE TELEMETRY UNIT NO. X
SF	SLOWER-FASTER
SS	START-STOP
SSC	SUPERVISORY SET POINT CONTROL
TCL_2	TOTAL CHLORINE RESIDUAL
TOC	TOTAL ORGANIC CARBON
TOD	TOTAL OXYGEN DEMAND
TURB	TURBIDITY
UPS	UNINTERRUPTABLE POWER SUPPLY
VHC	VOLATILE HYDROCARBONS
VIB	VIBRATION
△	DIFFERENCE
Σ	SUM
×	MULTIPLY
÷	DIVIDE
F(X)	CHARACTERIZED
X^n	RAISED TO THE Nth POWER
√‾	SQUARE ROOT
AVG	AVERAGE
1:1	REPEAT OR BOOST
>	SELECT HIGHEST SIGNAL
<	SELECT LOWEST SIGNAL
}	BIAS
%	GAIN OR ATTENUATE

GENERAL NOTES

1. COMPONENTS AND PANELS SHOWN WITH A (◆) ARE PROVIDED UNDER SECTION 40 90 00, INSTRUMENTATION AND CONTROL FROM PROCESS SYSTEMS.
2. COMPONENTS AND PANELS SHOWN WITH A SINGLE ASTERISK (✳) ARE TO BE PROVIDED AS PART OF A PACKAGE SYSTEM.
3. COMPONENTS AND PANELS SHOWN WITH A DOUBLE ASTERISK (✳✳) ARE TO BE PROVIDED UNDER DIVISION 26, ELECTRICAL.
4. THIS IS A STANDARD LEGEND. THEREFORE, NOT ALL OF THIS INFORMATION MAY BE USED ON THE PROJECT.

NO.	DATE	REVISION	BY	APVD
DSGN	C BATES	DR G MESSER	CHK J HANDWORK	APVD J HANDWORK

Jacobs
10 10TH STREET, SUITE 1400
ATLANTA, GA 30309
GA LIC # PEF000350 (EXP 6/30/2022)

CROSSTOWN AND SOUTH FAYETTE WTP
HOSELESS SOLIDS COLLECTION SYSTEM

FAYETTE COUNTY WATER SYSTEM
FAYETTE COUNTY, GEORGIA

GENERAL
INSTRUMENTATION AND CONTROLS LEGEND

REUSE OF DOCUMENTS: THIS DOCUMENT, AND THE IDEAS AND DESIGNS INCORPORATED HEREIN, AS AN INSTRUMENT OF PROFESSIONAL SERVICE, IS THE PROPERTY OF JACOBS AND IS NOT TO BE USED, IN WHOLE OR IN PART, FOR ANY OTHER PROJECT WITHOUT THE WRITTEN AUTHORIZATION OF JACOBS.

© JACOBS 2021. ALL RIGHTS RESERVED.

VERIFY SCALE
BAR IS ONE INCH ON ORIGINAL DRAWING.
0 1"

DATE	MARCH 2021
PROJ	D3101212
DWG	01-G-005
SHEET	5 of 36

BID DOCUMENTS

VALVE SYMBOLS

- GATE
- KNIFE GATE
- BUTTERFLY
- GLOBE
- BALL
- VEE-BALL
- PLUG
- SEAT PORT ECCENTRIC PLUG
- DIAPHRAGM
- PINCH
- NEEDLE
- SWING CHECK
- BALL CHECK
- BACKFLOW PREVENTER
- ROTARY
- TELESCOPE
- SAMPLE
- MUD
- PRESSURE RELIEF
- AIR AND/OR VACUUM RELEASE
- REGULATED SIDE PRESSURE CONTROL
- PRESSURE REGULATION (CLAY-TYPE)
- MULTI-PORT VALVE (GATE VALVE SHOWN. FOR OTHER VALVE TYPES, APPROPRIATE VALVE SYMBOL SHOWN.) SEAT PORTS ARE IMPLIED BY INDICATED FLOW PATTERN.
- ANGLE GATE

GATE SYMBOLS

- SLUICE
- BUTTERFLY
- FABRICATED SLIDE
- FLAP
- STOP LOG
- SHEAR

ACTUATOR SYMBOLS

- PNEUMATIC DIAPHRAGM SPRING-OPPOSED, SINGLE OR DOUBLE ACTING
- PNEUMATIC CYLINDER SINGLE OR DOUBLE ACTING ACTUATED BY ONE INPUT
- ELECTRIC MOTOR
- SOLENOID
- VALVE POSITIONER
- HYDRAULIC
- DIAPHRAGM, DIFFERENTIAL PRESSURE
- ELECTROHYDRAULIC
- MANUAL

NOTE:
ON LOSS OF PRIMARY POWER (PNEUMATIC, ELECTRICAL, OR HYDRAULIC)

XX: FO FAIL OPEN
FC FAIL CLOSED
FLP FAIL TO LAST POSITION

PRIMARY ELEMENT SYMBOLS

- PARSHALL FLUME
- WEIR
- ORIFICE PLATE
- FLOW TUBE
- PITOT-STATIC
- VORTEX METER
- ULTRASONIC FLOWMETER
- ELECTROMAGNETIC FLOWMETER
- VENTURI FLOWMETER
- PROPELLER OR TURBINE METER
- THERMAL FLOWMETER
- LEVEL (BUBBLER TUBE)
- LS — LEVEL (FLOAT)
- FI — ROTAMETER
- DE — DENSITY METER
- XX — GENERIC
- LE — LEVEL

MISCELLANEOUS SYMBOLS

- V — VENT TO ATMOSPHERE
- AIR GAP
- T — DRIP TRAP
- PIG INSERT POINT
- PIG CATCH POINT
- A — SELF CONTAINED AIR SUPPLY
- AP — AIR PURGE SET
- F — FLUSHING CONNECTION
- S — SEAL WATER SET
- WP — WATER PURGE SET
- FLEXIBLE CONNECTION
- AERATOR
- DIAPHRAGM SEAL
- ANNULAR DIAPHRAGM SEAL
- SS — COMPOSITE SAMPLER
- FLAME TRAP
- CALIBRATION COLUMN
- S — INLINE SILENCER
- BLIND FLANGE
- PIPE CAP
- STRAINER
- BASKET STRAINER
- FILTER
- PULSATION DAMPENER
- EXPANSION CHAMBER
- SSX — SURGE SUPPRESSOR TYPE "X"
- FFLCPLLLX — PANEL CONTINUED ON SAME OR OTHER DRAWING
- PANEL OUTLINE
- PANEL NAME
- 120V — 120 VOLT, 60 HZ POWER
- 480V — 480 VOLT, 60 HZ POWER
- XX — AIR SET XX = SUPPLY PRESSURE IN PSIG.
- PLUG
- RECEPTACLE
- RUPTURE DISK (VACUUM)
- RUPTURE DISK (PRESSURE)
- TV — TV MONITOR
- TV — TV CAMERA
- A, B → AND → C — LOGIC ELEMENT: IF A AND NOT B THEN C
- A, B → OR → C — LOGIC ELEMENT: IF A OR B THEN C
- RADIO ANTENNA
- I — INTERLOCK, SEE CONTROL DIAGRAMS
- OR
- I
- VOICE COMMUNICATION POINT
- SKIMMING MECHANISM
- SCREW CONVEYOR
- MIXER
- ELECTRIC MOTOR

PUMP AND COMPRESSOR SYMBOLS

- XX — CENTRIFUGAL PUMP (DRY PIT)
- XX — CENTRIFUGAL WET PIT PUMP OR TURBINE PUMP
- XX — RECIPROCATING OR METERING PUMP (POSITIVE DISPLACEMENT)
- XX — DIAPHRAGM PUMP
- XX — GEAR PUMP OR BLOWER (POSITIVE DISPLACEMENT)
- XX — PROGESSING CAVITY PUMP
- XX — COMPRESSOR (CENTRIFUGAL)
- XX — COMPRESSOR (PISTON)
- XX — BLOWER OR FAN (CENTRIFUGAL)
- EDUCTOR
- XX — PISTON PUMP
- XX — SUBMERSIBLE SUMP PUMP
- ROTARY PUMP
- VACUUM PUMP
- SCREW PUMP

XX: AS ADJUSTABLE SPEED
CS-1 CONSTANT SPEED (SINGLE SPEED)
CS-2 CONSTANT SPEED (TWO SPEED)

FLOW STREAM IDENTIFICATION

RSD RESIDUALS (SETTLED SOLIDS)

NO.	DATE	REVISION	BY	APVD

DSGN C BATES | DR G MESSER | CHK J HANDWORK | APVD J HANDWORK

Jacobs
10 10TH STREET, SUITE 1400
ATLANTA, GA 30309
GA LIC # PEF000350 (EXP 6/30/2022)

CROSSTOWN AND SOUTH FAYETTE WTP HOSELESS SOLIDS COLLECTION SYSTEM
FAYETTE COUNTY WATER SYSTEM
FAYETTE COUNTY, GEORGIA

GENERAL
INSTRUMENTATION AND CONTROLS LEGEND

REUSE OF DOCUMENTS: THIS DOCUMENT, AND THE IDEAS AND DESIGNS INCORPORATED HEREIN, AS AN INSTRUMENT OF PROFESSIONAL SERVICE, IS THE PROPERTY OF JACOBS AND IS NOT TO BE USED, IN WHOLE OR IN PART, FOR ANY OTHER PROJECT WITHOUT THE WRITTEN AUTHORIZATION OF JACOBS.
© JACOBS 2021. ALL RIGHTS RESERVED.

VERIFY SCALE
BAR IS ONE INCH ON ORIGINAL DRAWING.
0 1"

DATE	MARCH 2021
PROJ	D3101212
DWG	01-G-006
SHEET	6 of 36

BID DOCUMENTS

SYMBOL	DESCRIPTION

ONE LINE DIAGRAMS

400	CIRCUIT BREAKER, THERMAL MAGNETIC TRIP SHOWN, 3 POLE, UNO
100/M	CIRCUIT BREAKER, MAGNETIC TRIP ONLY, TRIP RATING SHOWN, 3 POLE, UNO
100	SWITCH, CURRENT RATING INDICATED, 3 POLE, UNO
60 (3)	FUSE, CURRENT RATING AND QUANTITY INDICATED
1	MAGNETIC STARTER WITH OVERLOAD, NEMA SIZE INDICATED, FVNR UNO
AFD	ELECTRONIC STARTER/SPEED CONTROL RVSS = REDUCED VOLTAGE SOFT STARTER AFD = AC ADJUSTABLE FREQUENCY DRIVE DC = DC ADJUSTABLE SPEED DRIVE RVAT = REDUCED VOLTAGE AUTO TRANSFORMER TYPE RVRT = REDUCED VOLTAGE REACTOR TYPE
	CABLE OR BUS CONNECTION POINT
	SURGE ARRESTER (GAP TYPE)
10	CAPACITOR - KVAR INDICATED, 3 PHASE
3	AC MOTOR, SQUIRREL CAGE INDUCTION - HORSEPOWER INDICATED
G 500/625	GENERATOR, KW/KVA RATING SHOWN
VS V 0-600V	ANALOG METER WITH SWITCH - SCALE RANGE SHOWN V = VOLTAGE KW = KILOWATTS A = AMPERAGE KVAR = KILOVARS PF = POWER FACTOR
DPM	DIGITAL POWER METER (MULTIFUNCTION)
	GROUND
15 KVA 480-120/240V 1 PH	TRANSFORMER, SIZE, VOLTAGE RATINGS, AND PHASE INDICATED
480-120V (3)	POTENTIAL TRANSFORMER, VOLTAGE RATING AND QUANTITY INDICATED
100:5 (3)	CURRENT TRANSFORMER, RATIO(100:5) AND QUANTITY INDICATED (3)
	CONNECTION POINT TO EQUIPMENT SPECIFIED IN OTHER DIVISIONS. RACEWAY, CONDUCTOR AND CONNECTION IN THIS DIVISION
TVSS	TRANSIENT VOLTAGE SURGE SUPPRESSOR
	TERMINAL BLOCK LUG
	DELTA CONNECTION
	WYE GROUNDED CONNECTION, SOLID GROUND

SYMBOL	DESCRIPTION

POWER SYSTEM PLAN

LPXXA	PANELBOARD - SURFACE MOUNTED PANELBOARD LETTER OR NUMBER FACILITY NUMBER LP - LOW VOLTAGE PANEL DP - DISTRIBUTION PANEL
LPXXA	HOME RUN - DESTINATION SHOWN
or G	EXPOSED CONDUIT AND CONDUCTORS*
or G	CONCEALED CONDUIT AND CONDUCTORS*

NOTE:
ALL UNMARKED CONDUIT RUNS CONSIST OF TWO NO. 12, ONE NO. 12 GROUND CONDUCTORS IN 3/4" CONDUIT. RUNS MARKED WITH CROSSHATCHES INDICATE NUMBER OF NO. 12 CONDUCTORS. CROSSHATCH WITH SUBSCRIPT "G" INDICATES GREEN GROUND WIRE.

G	CROSSHATCHES WITH BAR INDICATE NO.10 CONDUCTOR. SIZE CONDUIT ACCORDING TO SPECIFICATIONS AND APPLICABLE CODE.
[A1]	CONDUIT AND CONDUCTOR CALLOUT, SEE LEGEND.
	CONDUIT DOWN
	CONDUIT UP
	CONDUIT, STUBBED AND CAPPED
	CONDUIT TERMINATION AT CABLE TRAY
EX	EXISTING CONDUIT/ DUCT BANK
BD	BUS DUCT - SEE SPECIFICATIONS
CE	CONCRETE ENCASED CONDUIT
DB	DIRECT BURIED CONDUIT
FO	FIBER OPTIC CONDUIT
J or HH	GENERAL CONTROL OR WIRING DEVICE. LETTER SYMBOLS OR ABBREVIATIONS INDICATE TYPE OF DEVICE
CS	CONTROL STATION, SEE CONTROL DIAGRAMS FOR CONTROL DEVICE(S) REQUIRED.
30	NONFUSED DISCONNECT SWITCH, CURRENT RATING INDICATED, 3 POLE

GROUND SYSTEM PLAN

	GROUND ROD
	GROUND ROD IN TEST WELL
G	GROUNDING CONDUCTOR, SIZE AS INDICATED
	PIGTAIL FOR CONNECTION TO EQUIPMENT CABINET OR FRAME
G	EQUIPMENT GROUND BUS
N	EQUIPMENT NEUTRAL BUS

NOTES:

1. THESE ARE STANDARD LEGEND SHEETS. SOME SYMBOLS AND ABBREVIATIONS MAY APPEAR ON THE LEGEND AND NOT ON THE DRAWINGS.
2. FOR ADDITIONAL ABBREVIATIONS OF OTHER DIVISIONS (HVAC, MECHANICAL, AND STRUCTURAL/ARCHITECTURAL) SEE OTHER LEGENDS.

CONDUIT AND RACEWAY

GENERAL CIRCUIT CONDUCTOR AND CONDUIT IDENTIFICATION

POWER CIRCUIT CALLOUTS

[P1]	[1/2"FLEX, 2#12, #12G]	[P24]	[1"C, 3#8, 3#14, 1#10G]
[P2]	[3/4"C, 2#12, 1#12G]	[P25]	[1"C, 3#8, 4#14, 1#10G]
[P3]	[3/4"C, 3#12, 1#12G]	[P26]	[1"C, 3#8, 5#14, 1#10G]
[P4]	[3/4"C, 4#12, 1#12G]	[P27]	[1"C, 2#6, 1#10G]
[P5]	[3/4"C, 5#12, 1#12G]	[P28]	[1"C, 3#6, 1#10G]
[P6]	[3/4"C, 6#12, 1#12G]	[P29]	[1"C, 3#6, 2#14, 1#10G]
[P7]	[3/4"C, 7#12, 1#12G]	[P30]	[1"C, 3#6, 3#14, 1#10G]
[P8]	[3/4"C, 8#12, 1#12G]	[P31]	[1"C, 3#6, 4#14, 1#10G]
[P9]	[3/4"C, 4#12, 2#10, 1#12G]	[P32]	[1"C, 4#6, 1#8G]
[P10]	[3/4"C, 3#12, 3#14, 1#12G]	[P33]	[1"C, 3#4, 1#8G]
[P11]	[3/4"C, 3#12, 4#14, 1#12G]	[P34]	[1 1/4"C, 3#4, 3#14, 1#8G]
[P12]	[3/4"C, 3#12, 5#14, 1#12G]	[P35]	[1 1/4"C, 3#4, 5#14, 1#8G]
[P13]	[3/4"C, 3#12, 6#14, 1#12G]	[P36]	[1 1/4"C, 3#3, 1#8G]
[P14]	[3/4"C, 3#12, 7#14, 1#12G]	[P37]	[1 1/4"C, 3#3, 3#14, 1#8G]
[P15]	[3/4"C, 2#10, 1#10G]	[P38]	[1 1/4"C, 3#2, 1#6G]
[P16]	[3/4"C, 3#10, 1#10G]	[P39]	[1 1/4"C, 3#1, 1#6G]
[P17]	[3/4"C, 4#10, 1#10G]	[P40]	[1 1/2"C, 3#1, 3#14, 1#6G]
[P18]	[3/4"C, 6#10, 1#10G]	[P41]	[1 1/2"C, 3#2/0, 1#6G]
[P19]	[3/4"C, 8#10, 1#10G]	[P42]	[2"C, 3#3/0, 1#4G]
[P20]	[3/4"C, 3#10, 5#14, 1#10G]	[P43]	[2"C, 3#4/0, 1#4G]
[P21]	[1"C, 2#8, 1#10G]	[P45]	[2"C, 4#1, 1#6G]
[P22]	[1"C, 3#8, 1#10G]		
[P23]	[1"C, 3#8, 2#14,1#10G]		

POWER CABLE CIRCUIT CALLOUTS

[PC1]	[3/4"C, 1 (3C#12, 1#12G) TYPE 2]
[PC2]	[3/4"C, 1 (3C#10, 1#10G) TYPE 2]
[PC3]	[1"C, 1 (3C#8, 1#10G) TYPE 2]
[PC4]	[1 1/4"C, 2 (3C#12, 1#12G) TYPE 2]
[PC5]	[1 1/2"C, 2 (3C#10, 1#10G) TYPE 2]
[PC1A]	[3/4"C, 1 (2C#12, 1#12G) TYPE 2]
[PC2A]	[3/4"C, 1 (2C#10, 1#10G) TYPE 2]

EMPTY CONDUIT

[EC-1]	[3/4"C, WITH PULL STRING]
[EC-2]	[1"C, WITH PULL STRING]
[EC-3]	[1 1/4"C, WITH PULL STRING]
[EC-4]	[1 1/2"C, WITH PULL STRING]
[EC-5]	[2"C, WITH PULL STRING]
[EC-6]	[3"C, WITH PULL STRING]
[EC-7]	[4"C, WITH PULL STRING]
[EC-8]	[5"C, WITH PULL STRING]

ANALOG CIRCUIT CALLOUTS

[A1]	[3/4"C, 1 TYPE 3]
[A2]	[1"C, 2 TYPE 3]
[A3]	[1"C, 3 TYPE 3]
[A4]	[1"C, 4 TYPE 3]
[A5]	[1 1/4"C, 5 TYPE 3]
[A6]	[1 1/4"C, 6 TYPE 3]
[A7]	[1 1/2"C, 7 TYPE 3]
[A8]	[1 1/2"C, 8 TYPE 3]
[A9]	[1 1/2"C, 9 TYPE 3]
[A10]	[2"C, 10 TYPE 3]
[A11]	[2"C, 11 TYPE 3]
[A12]	[2"C, 12 TYPE 3]
[A13]	[2"C, 13 TYPE 3]
[A14]	[2"C, 14 TYPE 3]
[A26]	[1"C, 1-TYPE CAT 6]

CONTROL CIRCUIT CALLOUTS

[C1]	[3/4"C, MSC]
[C2]	[3/4"C, 2#14, 1#14G]
[C3]	[3/4"C, 3#14, 1#14G]
[C4]	[3/4"C, 4#14, 1#14G]
[C5]	[3/4"C, 5#14, 1#14G]
[C6]	[3/4"C, 6#14, 1#14G]
[C7]	[3/4"C, 7#14, 1#14G]
[C8]	[3/4"C, 8#14, 1#14G]
[C9]	[3/4"C, 9#14, 1#14G]
[C10]	[3/4"C, 10#14, 1#14G]
[C11]	[3/4"C, 11#14, 1#14G]
[C12]	[3/4"C, 12#14, 1#14G]
[C13]	[3/4"C, 13#14, 1#14G]
[C14]	[3/4"C, 14#14, 1#14G]
[C15]	[3/4"C, 15#14, 1#14G]
[C16]	[3/4"C, 16#14, 1#14G]
[C17]	[3/4"C, 17#14, 1#14G]
[C18]	[3/4"C, 18#14, 1#14G]
[C19]	[3/4"C, 19#14, 1#14G]
[C20]	[1"C, 20#14, 1#14G]
[C21]	[1"C, 21#14, 1#14G]
[C22]	[1"C, 22#14, 1#14G]
[C23]	[1"C, 23#14, 1#14G]
[C24]	[1"C, 24#14, 1#14G]
[C25]	[1"C, 25#14, 1#14G]

CONTROL CABLE CIRCUIT CALLOUTS

[CC5]	[3/4"C, 1-5C TYPE 1]
[CC7]	[3/4"C, 1-7C TYPE 1]
[CC9]	[1"C, 1-9C TYPE 1]
[CC12]	[1"C, 1-12C TYPE 1]
[CC19]	[1 1/2"C, 1-19C TYPE 1]
[CC25]	[1 1/2"C, 1-25C TYPE 1]
[CC37]	[2"C, 1-37C TYPE 1]
[CCC1]	[1-7C #12 TYPE 1]

NOTES:

1. FOR CABLE TYPES, SEE SPECIFICATIONS.
2. CONDUIT SIZES ARE BASE ON THE AREA OF THW CONDUCTORS.
3. SIZING OF CONDUCTORS #2AWG AND SMALLER BASED ON AMPACITIES AT 60 DEGREES C, SIZING OF CONDUCTORS #1AWG AND LARGER BASED ON AMPACITIES AT 75 DEGREES C.
4. WHERE CIRCUITS ARE UNDERGROUND, DIRECT BURIED OR CONCRETE ENCASED, MINIMUM CONDUIT SIZE SHALL BE 1".
5. FOR METRIC CONDUIT SIZES USE THE FOLLOWING CONVERSION:
   1/2" = 16 mm 1/4" = 35 mm
   3/4" = 21 mm 1 1/2" = 41 mm
   1" = 27 mm 2" = 53 mm

NO.	DATE	REVISION	BY	APVD

DSGN KB HORTON | DR G MESSER | CHK T HOMAYOONI | APVD KB HORTON

Jacobs
10 10TH STREET, SUITE 1400
ATLANTA, GA 30309
GA LIC # PEF000350 (EXP 6/30/2022)

CROSSTOWN AND SOUTH FAYETTE WTP
HOSELESS SOLIDS COLLECTION SYSTEM
FAYETTE COUNTY WATER SYSTEM
FAYETTE COUNTY, GEORGIA

GENERAL
ELECTRICAL LEGEND

REUSE OF DOCUMENTS: THIS DOCUMENT, AND THE IDEAS AND DESIGNS INCORPORATED HEREIN, AS AN INSTRUMENT OF PROFESSIONAL SERVICE, IS THE PROPERTY OF JACOBS AND IS NOT TO BE USED, IN WHOLE OR IN PART, FOR ANY OTHER PROJECT WITHOUT THE WRITTEN AUTHORIZATION OF JACOBS.
© JACOBS 2021. ALL RIGHTS RESERVED.

VERIFY SCALE
BAR IS ONE INCH ON ORIGINAL DRAWING.
0 1"

DATE	MARCH 2021
PROJ	D3101212
DWG	01-G-007
SHEET	7 of 36

BID DOCUMENTS

SHEET KEYNOTES

1. CONTRACTOR TO FIELD VERIFY INVERT DEPTH OF EXISTING 8" SLUDGE LINE
2. 8" SLUDGE LINE TO BE DEMOLISHED TO PROPOSED REDUCER
3. DISTURBED AREAS TO BE SEEDED PER SPECIFICATION 32 92 00B, TURFS AND GRASSES

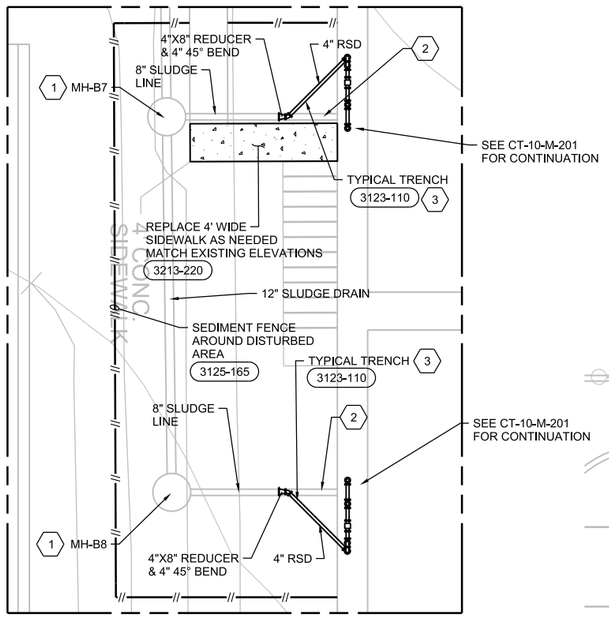

A ENLARGED PLAN
1"=10'

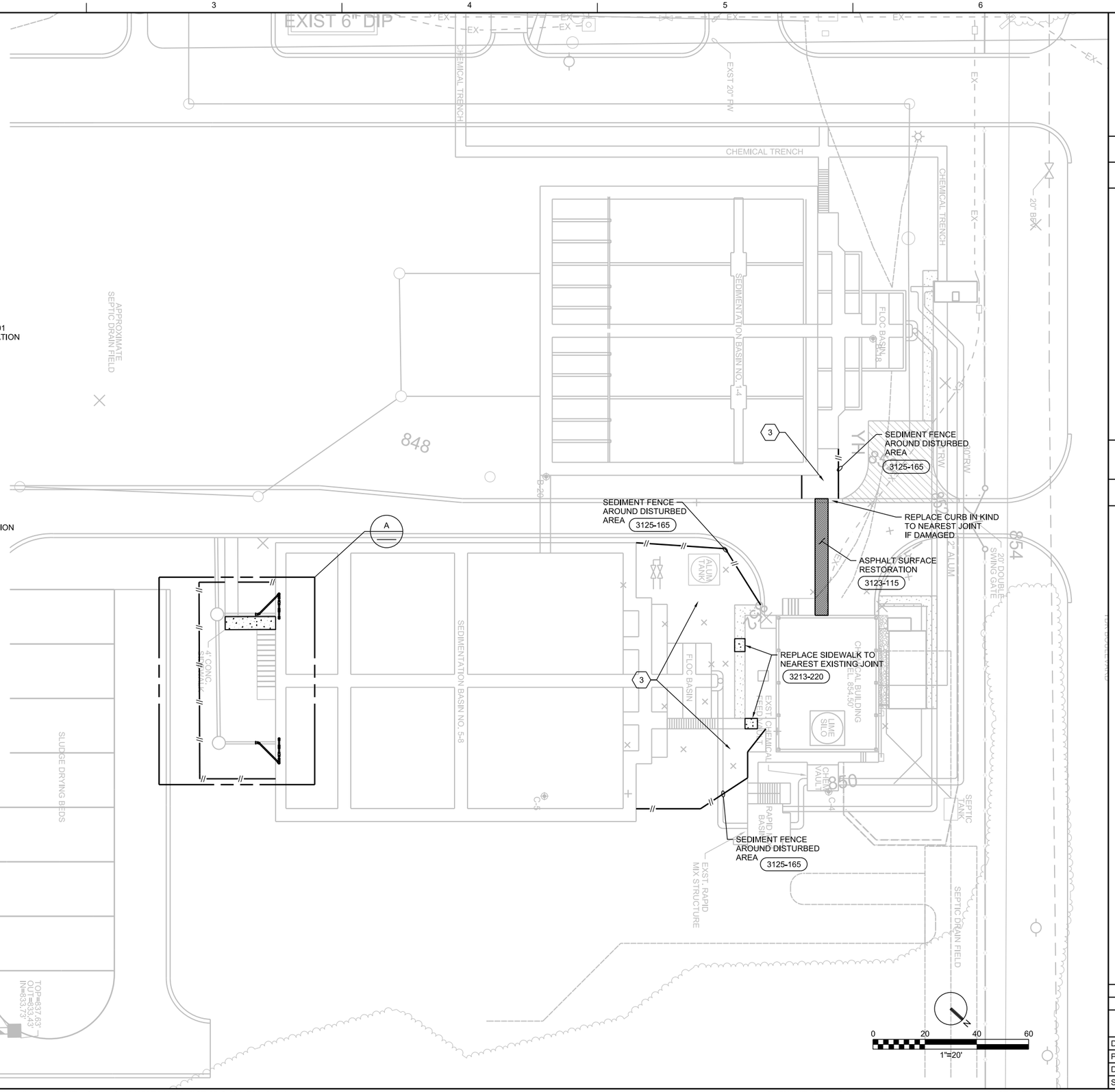

NO.	DATE	REVISION	BY	APVD

DSGN D RATZLAFF | DR D RATZLAFF | CHK N MEADE | APVD N MEADE

REUSE OF DOCUMENTS: THIS DOCUMENT, AND THE IDEAS AND DESIGNS INCORPORATED HEREIN, AS AN INSTRUMENT OF PROFESSIONAL SERVICE, IS THE PROPERTY OF JACOBS AND IS NOT TO BE USED, IN WHOLE OR IN PART, FOR ANY OTHER PROJECT WITHOUT THE WRITTEN AUTHORIZATION OF JACOBS.
©JACOBS 2021, ALL RIGHTS RESERVED.

10 10TH STREET, SUITE 1400
ATLANTA, GA 30309
GA LIC # PEF000350 (EXP 6/30/2022)

CROSSTOWN AND SOUTH FAYETTE WTP
HOSELESS SOLIDS COLLECTION SYSTEM

FAYETTE COUNTY WATER SYSTEM
FAYETTE COUNTY, GEORGIA

Jacobs

CIVIL
CROSSTOWN WTP PARTIAL SITE PLAN

VERIFY SCALE
BAR IS ONE INCH ON ORIGINAL DRAWING.
0 1"

DATE	MARCH 2021
PROJ	D3101212
DWG	CT-05-C-201
SHEET	8 of 36

BID DOCUMENTS

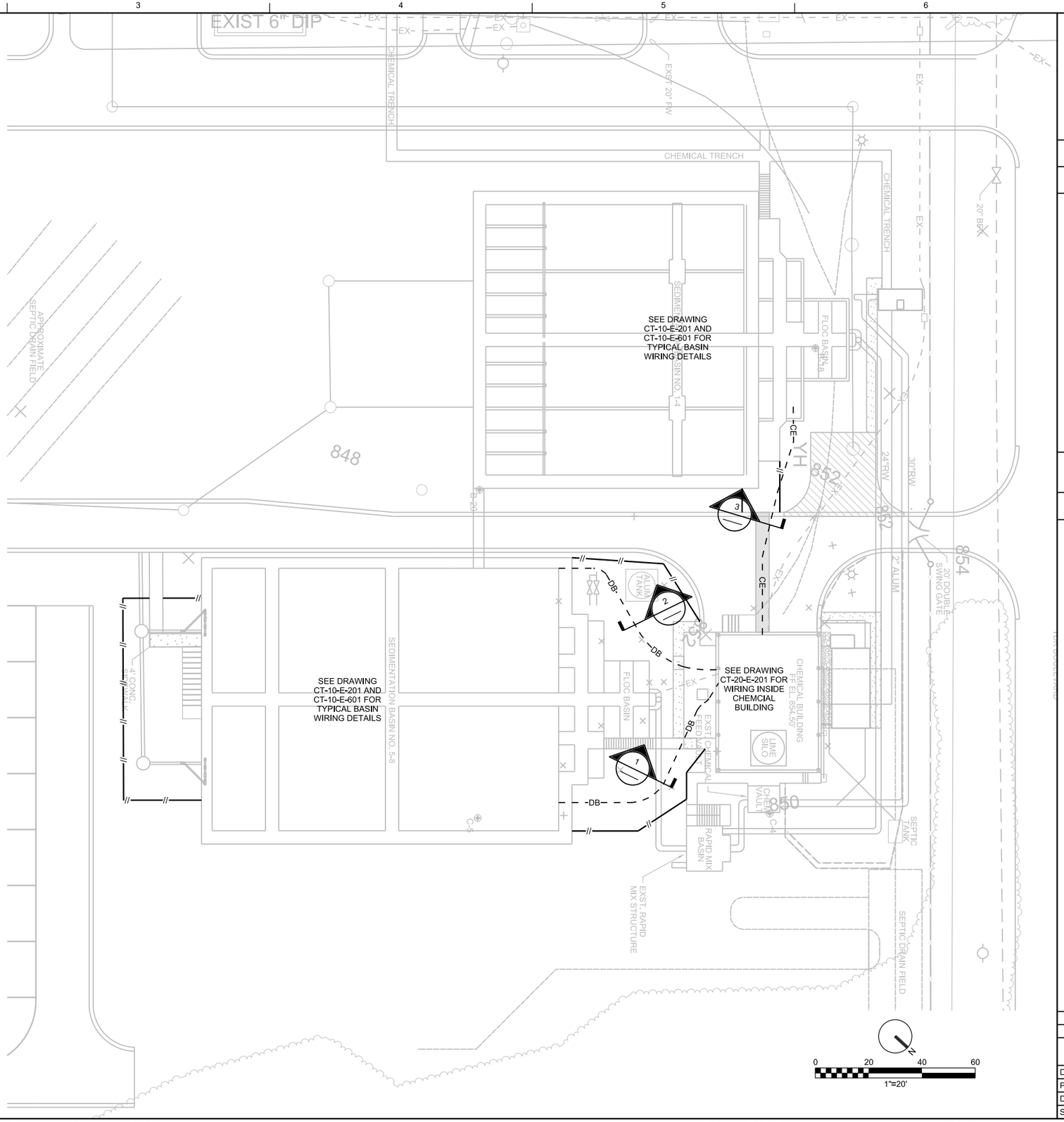

2605-420

1 2
3 4

1 SECTION
NTS

1 = [P21] FROM CP-110-D TO LP-G2]
2 = [P15] FROM FIT-112-D TO LP-G2]
3 = [A1] FROM FIT-112-D TO CP-CHEM-1] (PVC COATED RGS)
4 = [A26] FROM CP-110-D TO CP-CHEM-1] (PVC COATED RGS)

2605-420

1 2
3 4

2 SECTION
NTS

1 = [P21] FROM CP-110-C TO LP-G2]
2 = [P15] FROM FIT-112-C TO LP-G2]
3 = [A1] FROM FIT-112-C TO CP-CHEM-1] (PVC COATED RGS)
4 = [A26] FROM CP-110-C TO CP-CHEM-1] (PVC COATED RGS)

2605-400

1 2 3
4 5 6
7 8

3 SECTION
NTS

1 = [P21] FROM CP-110-A TO LP-G2]
2 = [P15] FROM FIT-112-A TO LP-G2]
3 = [P21] FROM CP-110-B TO LP-G2]
4 = [P15] FROM FIT-112-B TO LP-G2]
5 = [A1] FROM FIT-112-A TO CP-CHEM-1] (PVC COATED RGS)
6 = [A26] FROM CP-110-A TO CP-CHEM-1] (PVC COATED RGS)
7 = [A1] FROM FIT-112-A TO CP-CHEM-1] (PVC COATED RGS)
8 = [A26] FROM CP-110-A TO CP-CHEM-1] (PVC COATED RGS)

NO.	DATE	REVISION	BY	APVD

DSGN KB HORTON | DR KB HORTON | CHK G MESSER | APVD T HOMAYOONI | APVD KB HORTON

Jacobs
10 10TH STREET, SUITE 1400
ATLANTA, GA 30309
GA LIC # PEF000350 (EXP 6/30/2022)

CROSSTOWN AND SOUTH FAYETTE WTP
HOSELESS SOLIDS COLLECTION SYSTEM

FAYETTE COUNTY WATER SYSTEM
FAYETTE COUNTY, GEORGIA

ELECTRICAL
CROSSTOWN WTP PARTIAL SITE PLAN

REUSE OF DOCUMENTS: THIS DOCUMENT, AND THE IDEAS AND DESIGNS INCORPORATED HEREIN, AS AN INSTRUMENT OF PROFESSIONAL SERVICE, IS THE PROPERTY OF JACOBS AND IS NOT TO BE USED, IN WHOLE OR IN PART, FOR ANY OTHER PROJECT WITHOUT THE WRITTEN AUTHORIZATION OF JACOBS.
© JACOBS 2021. ALL RIGHTS RESERVED.

VERIFY SCALE
BAR IS ONE INCH ON ORIGINAL DRAWING.
0 1"

DATE	MARCH 2021
PROJ	D3101212
DWG	CT-05-E-201
SHEET	9 of 36

BID DOCUMENTS

SHEET KEYNOTES

1. 12" SLUDGE LINE TO BE DEMOLISHED TO PROPOSED REDUCER
2. DISTURBED AREAS TO BE SEEDED PER SPECIFICATION 32 92 00B, TURFS AND GRASSES

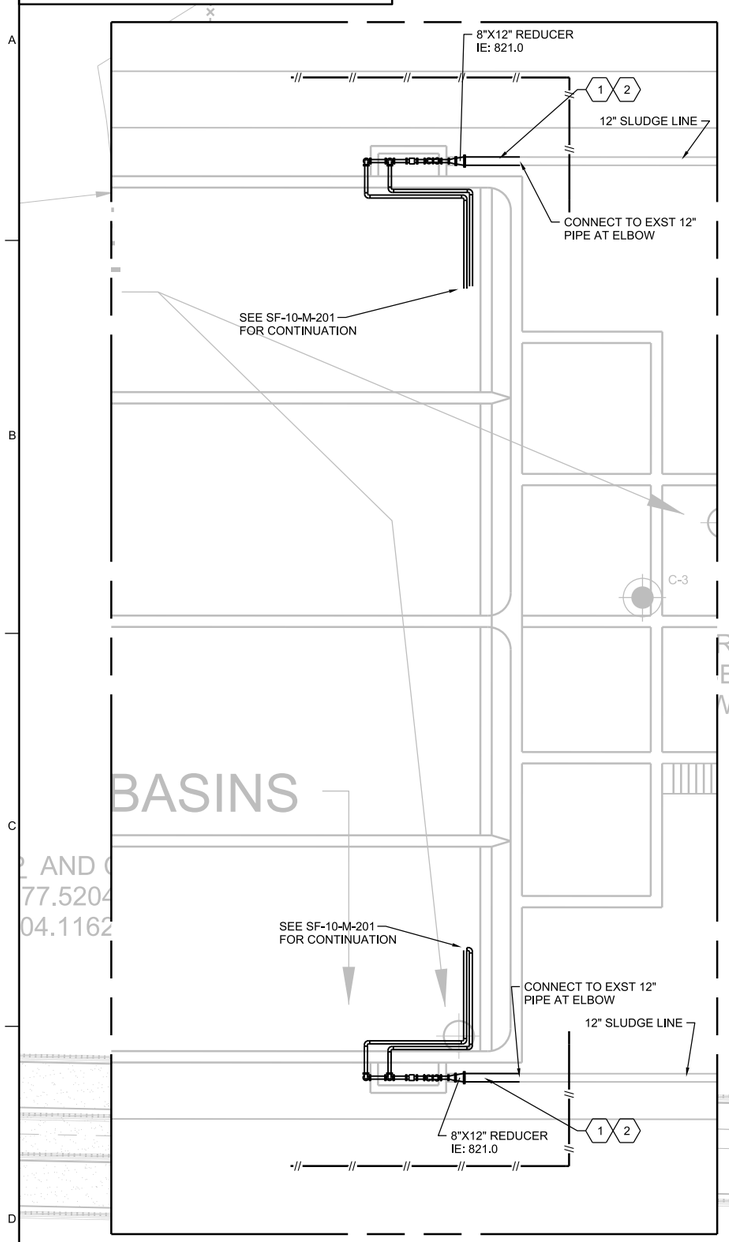

A ENLARGED PLAN
1"=10'

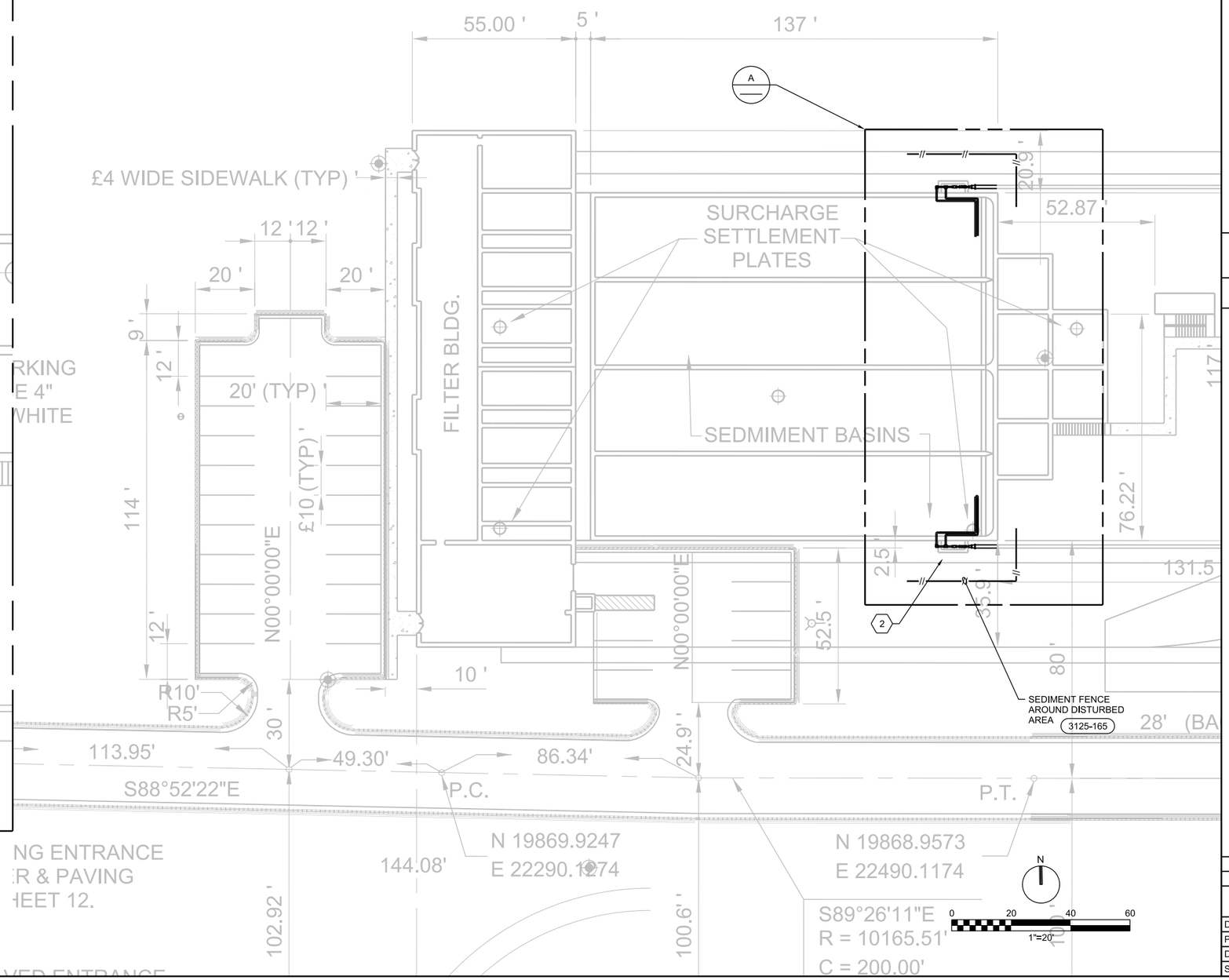

NO.	DATE	REVISION	BY	APVD

DSGN D RATZLAFF | DR D RATZLAFF | CHK N MEADE | APVD N MEADE

10 10TH STREET, SUITE 1400
ATLANTA, GA 30309
GA LIC # PEF000350 (EXP 6/30/2022)

CROSSTOWN AND SOUTH FAYETTE WTP
HOSELESS SOLIDS COLLECTION SYSTEM

FAYETTE COUNTY WATER SYSTEM
FAYETTE COUNTY, GEORGIA

Jacobs

CIVIL
SOUTH FAYETTE WTP
PARTIAL SITE PLAN

REUSE OF DOCUMENTS: THIS DOCUMENT, AND THE IDEAS AND DESIGNS INCORPORATED HEREIN, AS AN INSTRUMENT OF PROFESSIONAL SERVICE, IS THE PROPERTY OF JACOBS AND IS NOT TO BE USED, IN WHOLE OR IN PART, FOR ANY OTHER PROJECT WITHOUT THE WRITTEN AUTHORIZATION OF JACOBS.
© JACOBS 2021. ALL RIGHTS RESERVED.

VERIFY SCALE
BAR IS ONE INCH ON ORIGINAL DRAWING.
0 1"

DATE	MARCH 2021
PROJ	D3101212
DWG	SF-05-C-201
SHEET	10 of 36

BID DOCUMENTS

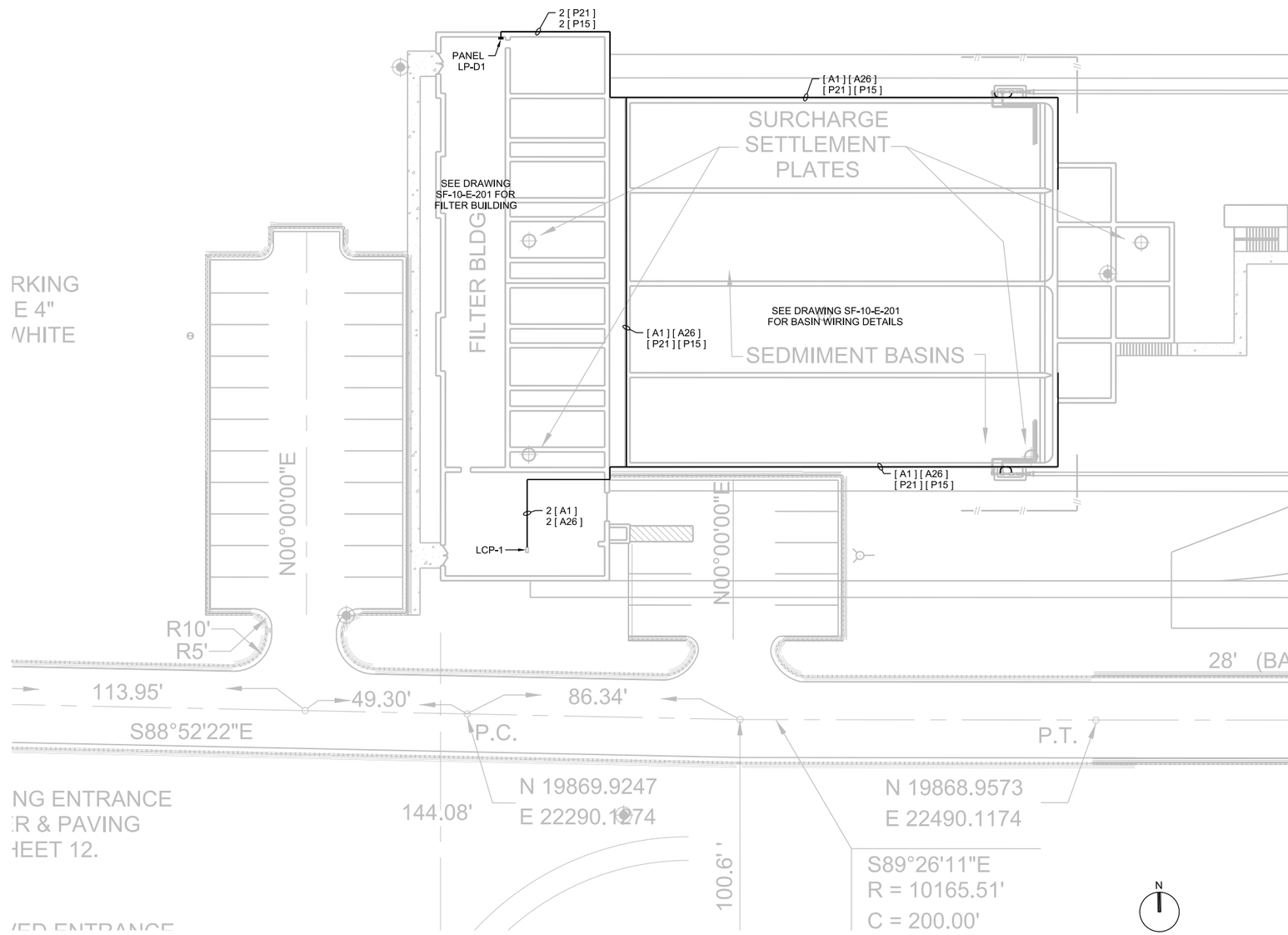

NO.	DATE	DR	REVISION	CHK	APVD
DSGN	KB HORTON	G MESSER	T HOMAYOONI	APVD	KB HORTON

	BY

©JACOBS 2021, ALL RIGHTS RESERVED.

10 10TH STREET, SUITE 1400
ATLANTA, GA 30309
GA LIC # PEF000350 (EXP 6/30/2022)

CROSSTOWN AND SOUTH FAYETTE WTP
HOSELESS SOLIDS COLLECTION SYSTEM

FAYETTE COUNTY WATER SYSTEM
FAYETTE COUNTY, GEORGIA

Jacobs

ELECTRICAL
SOUTH FAYETTE WTP
PARTIAL
SITE PLAN

REUSE OF DOCUMENTS: THIS DOCUMENT, AND THE IDEAS AND DESIGNS INCORPORATED HEREIN, AS AN INSTRUMENT OF PROFESSIONAL SERVICE, IS THE PROPERTY OF JACOBS AND IS NOT TO BE USED, IN WHOLE OR IN PART, FOR ANY OTHER PROJECT WITHOUT THE WRITTEN AUTHORIZATION OF JACOBS.

BID DOCUMENTS

VERIFY SCALE
BAR IS ONE INCH ON ORIGINAL DRAWING.
0 1"

DATE	MARCH 2021
PROJ	D3101212
DWG	SF-05-E-201
SHEET	11 of 36

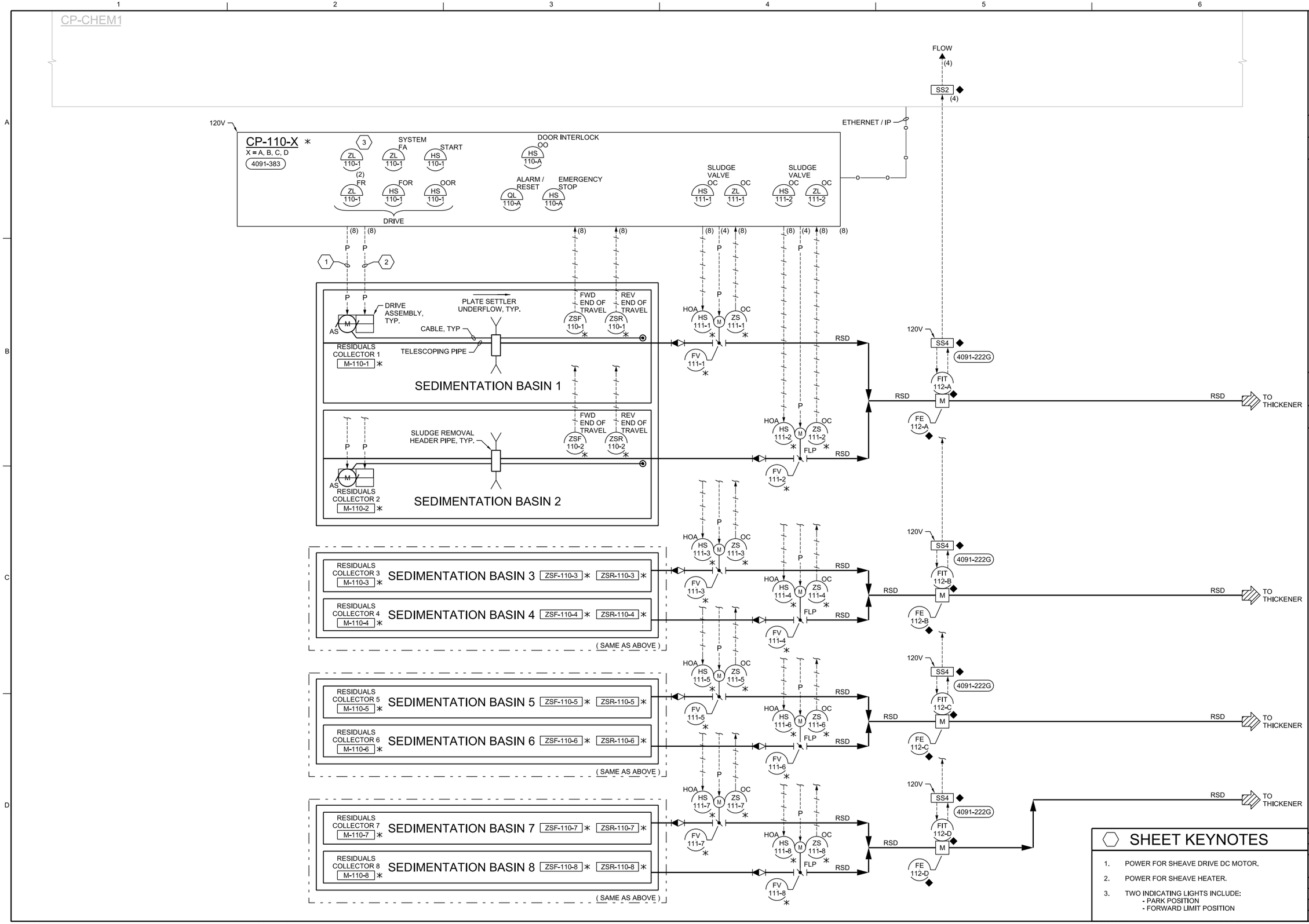

SHEET KEYNOTES

1. POWER FOR SHEAVE DRIVE DC MOTOR.
2. POWER FOR SHEAVE HEATER.
3. TWO INDICATING LIGHTS INCLUDE:
   - PARK POSITION
   - FORWARD LIMIT POSITION

NO.	DATE	REVISION	BY	APVD
DSGN	CL BATES	DR G MESSER	CHK J HANDWORK	APVD J HANDWORK

10 10TH STREET, SUITE 1400
ATLANTA, GA 30309
GA LIC # PEF000350 (EXP 6/30/2022)

CROSSTOWN AND SOUTH FAYETTE WTP
HOSELESS SOLIDS COLLECTION SYSTEM

FAYETTE COUNTY WATER SYSTEM
FAYETTE COUNTY, GEORGIA

Jacobs

INSTRUMENTATION AND CONTROL
P&ID
CROSSTOWN WTP
SEDIMENTATION BASINS 1 - 8

VERIFY SCALE
BAR IS ONE INCH ON ORIGINAL DRAWING.
0 1"

DATE	MARCH 2021
PROJ	D3101212
DWG	08-N-001
SHEET	12 of 36

BID DOCUMENTS

REUSE OF DOCUMENTS: THIS DOCUMENT, AND THE IDEAS AND DESIGNS INCORPORATED HEREIN, AS AN INSTRUMENT OF PROFESSIONAL SERVICE, IS THE PROPERTY OF JACOBS AND IS NOT TO BE USED, IN WHOLE OR IN PART, FOR ANY OTHER PROJECT WITHOUT THE WRITTEN AUTHORIZATION OF JACOBS.
© JACOBS 2021. ALL RIGHTS RESERVED.

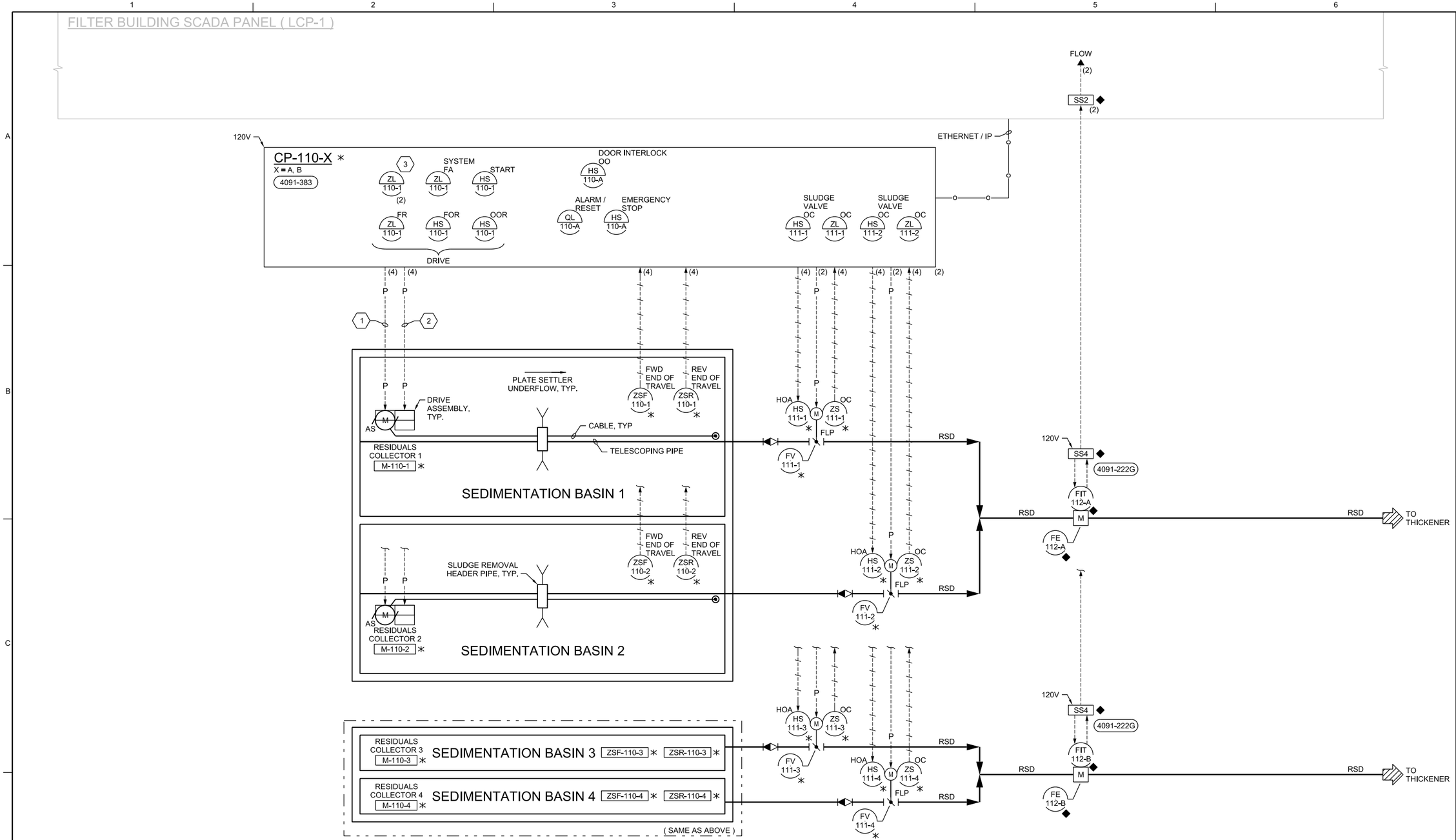

SHEET KEYNOTES

1. POWER FOR SHEAVE DRIVE DC MOTOR.
2. POWER FOR SHEAVE HEATER.
3. TWO INDICATING LIGHTS INCLUDE:
   - PARK POSITION
   - FORWARD LIMIT POSITION

NO.	DATE	REVISION	BY	APVD

DSGN: CL BATES | DR: G MESSER | CHK: J HANDWORK | APVD: J HANDWORK

10 10TH STREET, SUITE 1400
ATLANTA, GA 30309
GA LIC # PEF000350 (EXP 6/30/2022)

CROSSTOWN AND SOUTH FAYETTE WTP
HOSELESS SOLIDS COLLECTION SYSTEM

FAYETTE COUNTY WATER SYSTEM
FAYETTE COUNTY, GEORGIA

Jacobs

INSTRUMENTATION AND CONTROL
P&ID
SOUTH FAYETTE WTP
SEDIMENTATION BASINS 1 - 4

VERIFY SCALE
BAR IS ONE INCH ON ORIGINAL DRAWING.
0 1"

DATE	MARCH 2021
PROJ	D3101212
DWG	08-N-002
SHEET	13 of 36

BID DOCUMENTS

© JACOBS 2021. ALL RIGHTS RESERVED.
REUSE OF DOCUMENTS: THIS DOCUMENT, AND THE IDEAS AND DESIGNS INCORPORATED HEREIN, AS AN INSTRUMENT OF PROFESSIONAL SERVICE, IS THE PROPERTY OF JACOBS AND IS NOT TO BE USED, IN WHOLE OR IN PART, FOR ANY OTHER PROJECT WITHOUT THE WRITTEN AUTHORIZATION OF JACOBS.

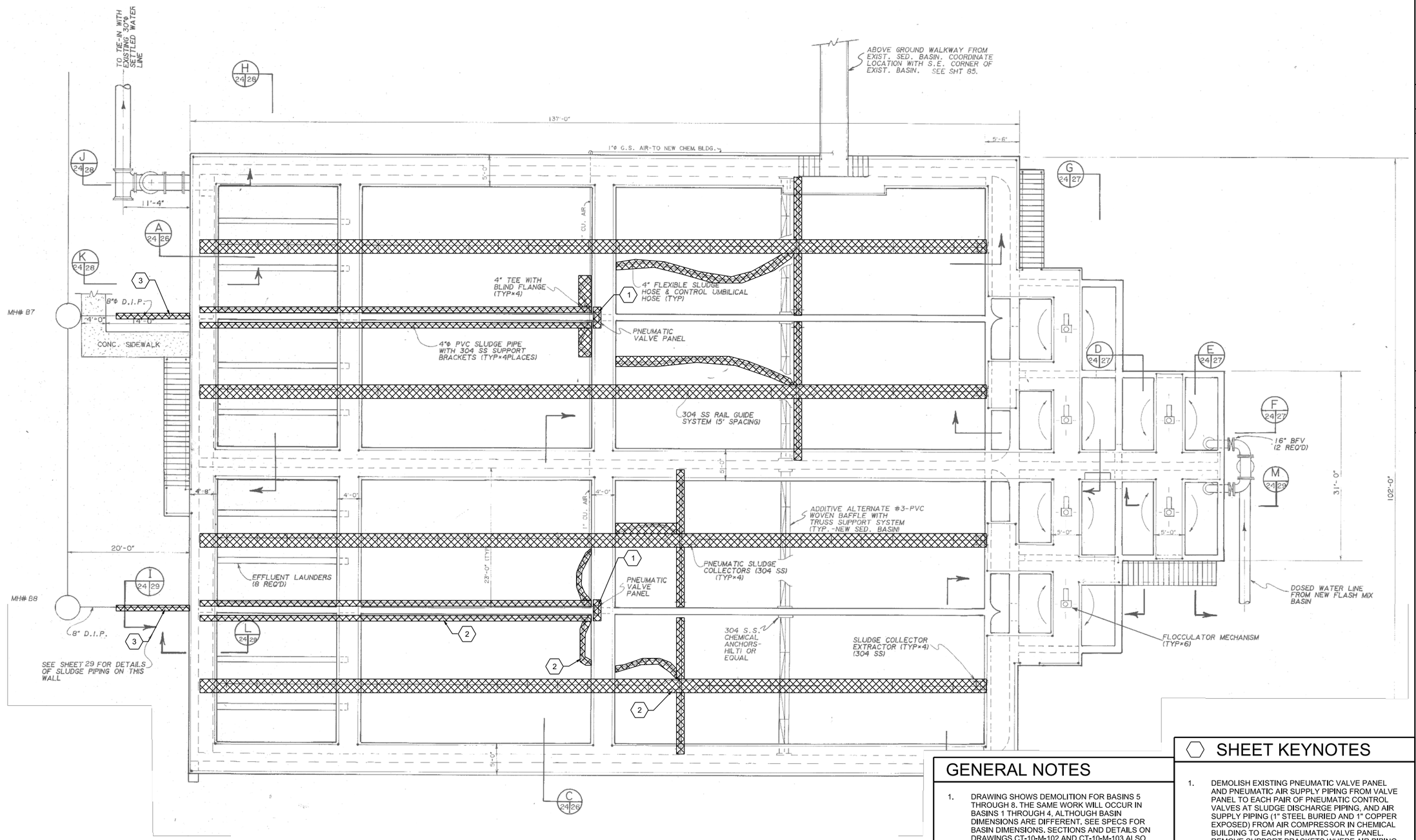

DEMOLITION PLAN - SEDIMENTATION BASINS 5-8

1/8"=1'-0"

GENERAL NOTES

1. DRAWING SHOWS DEMOLITION FOR BASINS 5 THROUGH 8. THE SAME WORK WILL OCCUR IN BASINS 1 THROUGH 4, ALTHOUGH BASIN DIMENSIONS ARE DIFFERENT. SEE SPECS FOR BASIN DIMENSIONS. SECTIONS AND DETAILS ON DRAWINGS CT-10-M-102 AND CT-10-M-103 ALSO APPLY TO BASINS 1 THROUGH 4.
2. PARTIAL DEMOLITION OF EXISTING CONCRETE SHALL BE AS INDICTED AND IN ACCORDANCE WITH DETAIL 0330-143. REFER TO CONCRETE REPAIR AND CONSTRUCTION NOTES ON DWG 01-G-003 FOR CONCRETE REPAIR.
3. WHERE EQUIPMENT SUPPORTS ARE BEING DEMOLISHED, AND ANCHORS ARE NOT SST, CUT BACK ANCHORS TO MINIMUM 1 1/2" BELOW TOP OF EXISTING CONCRETE TO REMAIN AND PATCH PER 0330-143 AND AS SPECIFIED.
4. SEE DWG 01-G-003 FOR ADDITIONAL INFORMATION.

SHEET KEYNOTES

1. DEMOLISH EXISTING PNEUMATIC VALVE PANEL AND PNEUMATIC AIR SUPPLY PIPING FROM VALVE PANEL TO EACH PAIR OF PNEUMATIC CONTROL VALVES AT SLUDGE DISCHARGE PIPING, AND AIR SUPPLY PIPING (1" STEEL BURIED AND 1" COPPER EXPOSED) FROM AIR COMPRESSOR IN CHEMICAL BUILDING TO EACH PNEUMATIC VALVE PANEL. REMOVE SUPPORT BRACKETS WHERE AIR PIPING IS ATTACHED TO CONCRETE WALLS AND WALKWAYS AND REPAIR CONCRETE. TYPICAL OF BASIN PAIRS 5 AND 6, 7 AND 8. SEE GENERAL NOTES THIS SHEET FOR CONCRETE REPAIR.
2. DEMOLISH EXISTING PNEUMATIC SLUDGE COLLECTORS, GUIDE RAIL AND BRACKETS, FLEXIBLE SLUDGE HOSE AND PVC PIPING TO POINT OF CONNECTION WITH WALL PIPE, AND PNEUMATIC SUPPLY HOSE TO TRACTOR. TYPICAL OF BASINS 5 THROUGH 8.
3. DEMOLISH EXISTING 8" DIP SLUDGE DISCHARGE PIPING AS REQUIRED FOR INSTALLATION AND CONNECTION OF NEW PIPING. TYPICAL OF BASIN PAIRS 5 AND 6, 7 AND 8.

NO.	DATE	REVISION	BY	APVD

DSGN	M RAM	CHK	J HORTON
DR	M HALES	APVD	E MINCHEW

Jacobs
10 10TH STREET, SUITE 1400
ATLANTA, GA 30309
GA LIC # PEF000350 (EXP 6/30/2022)

CROSSTOWN AND SOUTH FAYETTE WTP
HOSELESS SOLIDS COLLECTION SYSTEM
FAYETTE COUNTY WATER SYSTEM
FAYETTE COUNTY, GEORGIA

PROCESS MECHANICAL
CROSSTOWN WTP
SEDIMENTATION BASINS 5-8
DEMOLITION - PLAN

REUSE OF DOCUMENTS: THIS DOCUMENT, AND THE IDEAS AND DESIGNS INCORPORATED HEREIN, AS AN INSTRUMENT OF PROFESSIONAL SERVICE, IS THE PROPERTY OF JACOBS AND IS NOT TO BE USED, IN WHOLE OR IN PART, FOR ANY OTHER PROJECT WITHOUT THE WRITTEN AUTHORIZATION OF JACOBS.
© JACOBS 2021. ALL RIGHTS RESERVED.

VERIFY SCALE
BAR IS ONE INCH ON ORIGINAL DRAWING.
0 1"

DATE	MARCH 2021
PROJ	D3101212
DWG	CT-10-M-101
SHEET	14 of 36

BID DOCUMENTS

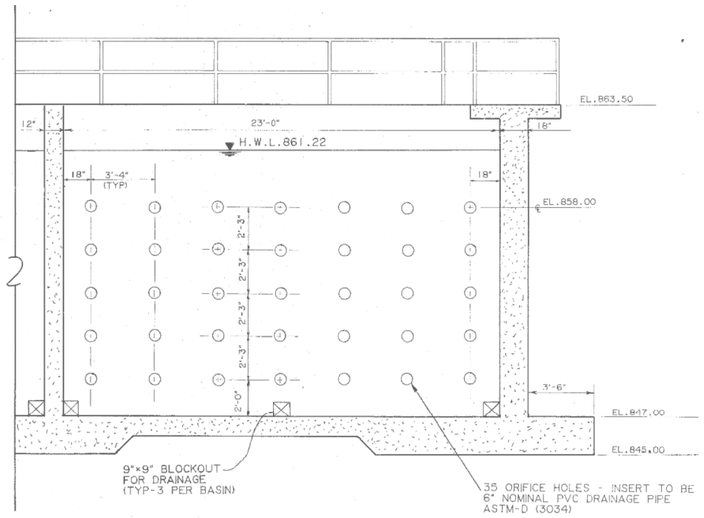

B 24|26 SECTION
1/4"=1'-0"
SED. BASIN INFLUENT DISTRIBUTION WALL

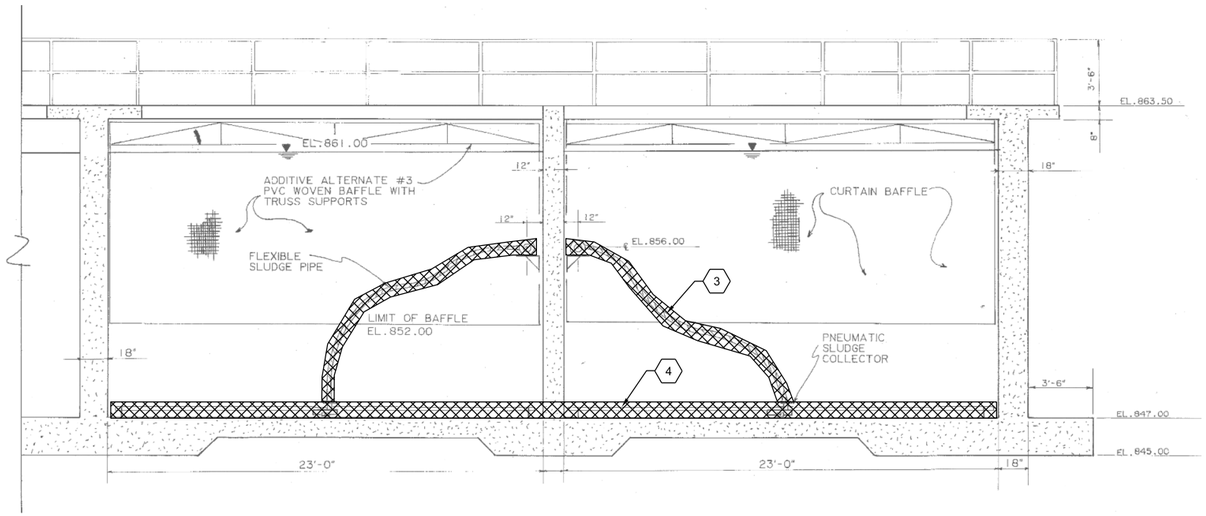

NOTE:

1. CONTRACTOR SHALL ANCHOR PVC CURTAIN BAFFLE TO SIDEWALK WITH CHEM. ANCHORS (HILTI OR EQUAL) CONSISTENT WITH MANUFACTURER'S RECOMMENDATIONS.

C 24|26 SECTION
1/4"=1'-0"

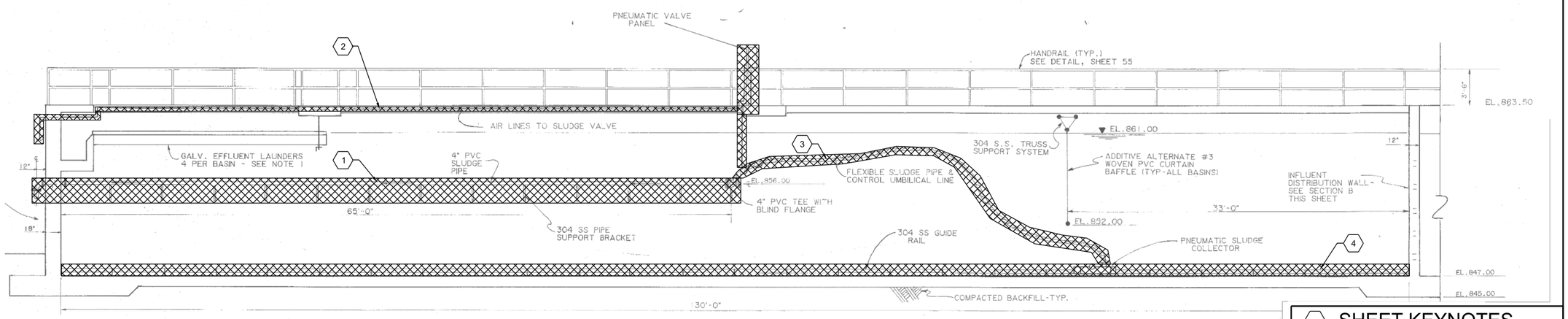

A 24|26 SECTION
3/16"=1'-0"

SHEET KEYNOTES

1. DEMOLISH 4" PVC SLUDGE DISCHARGE PIPING AND SUPPORT BRACKETS FROM HOSE CONNECTION TO WALL PIPE. REPAIR CONCRETE WHERE BRACKETS ARE REMOVED. TYPICAL OF 8. SEE SHEET GENERAL NOTES, DWG SF-10-M-101 FOR CONCRETE REPAIR.
2. DEMOLISH AIR LINES TO PNEUMATIC VALVE OUTSIDE OF BASINS, TYPICAL OF 8.
3. DEMOLISH FLEXIBLE SLUDGE HOSE AND PNEUMATIC CONTROL UMBILICAL HOSE, TYPICAL OF 8.
4. DEMOLISH PNEUMATIC SLUDGE COLLECTION SYSTEM, INCLUDING GUIDE RAIL AND SUPPORT BRACKETS. REPAIR CONCRETE WHERE BRACKETS ARE REMOVED. TYPICAL OF 8. SEE SHEET GENERAL NOTES, DWG SF-10-M-101 FOR CONCRETE REPAIR.

NO.	DATE	REVISION	BY	APVD

DSGN	DR	CHK	APVD
M RAM	M HALES	J HORTON	E MINCHEW

Jacobs
10 10TH STREET, SUITE 1400
ATLANTA, GA 30309
GA LIC # PEF000350 (EXP 6/30/2022)

CROSSTOWN AND SOUTH FAYETTE WTP
HOSELESS SOLIDS COLLECTION SYSTEM
FAYETTE COUNTY WATER SYSTEM
FAYETTE COUNTY, GEORGIA

PROCESS MECHANICAL
CROSSTOWN WTP SEDIMENTATION BASINS 5-8 DEMOLITION - SECTIONS

REUSE OF DOCUMENTS: THIS DOCUMENT, AND THE IDEAS AND DESIGNS INCORPORATED HEREIN, AS AN INSTRUMENT OF PROFESSIONAL SERVICE, IS THE PROPERTY OF JACOBS AND IS NOT TO BE USED, IN WHOLE OR IN PART, FOR ANY OTHER PROJECT WITHOUT THE WRITTEN AUTHORIZATION OF JACOBS.
© JACOBS 2021. ALL RIGHTS RESERVED.

VERIFY SCALE
BAR IS ONE INCH ON ORIGINAL DRAWING.
0 1"

DATE	MARCH 2021
PROJ	D3101212
DWG	CT-10-M-102
SHEET	15 of 36

BID DOCUMENTS

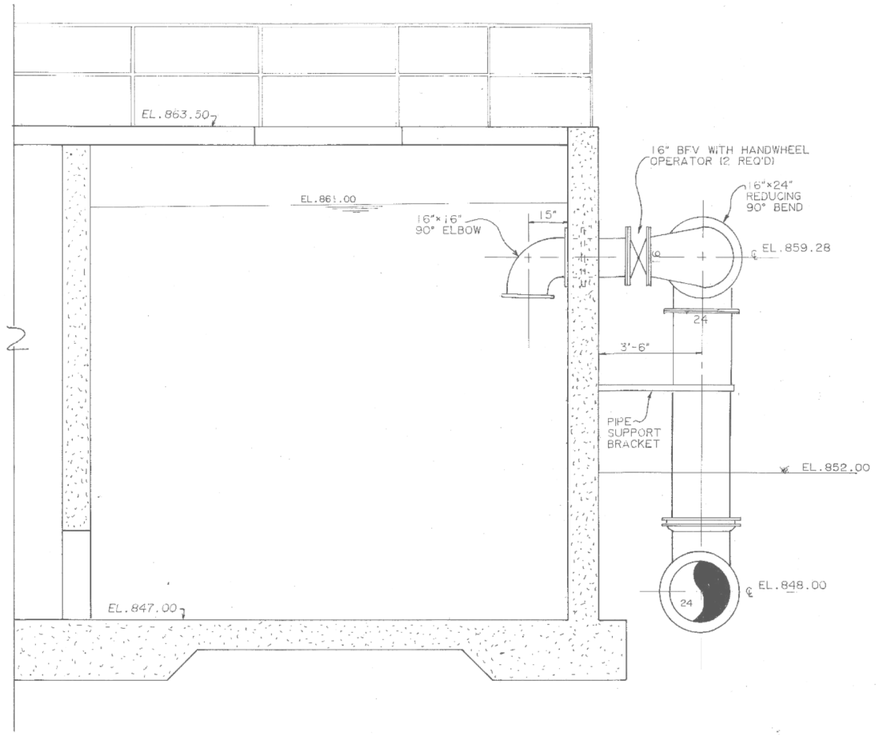

M 24/29 SECTION
3/8" = 1'-0"

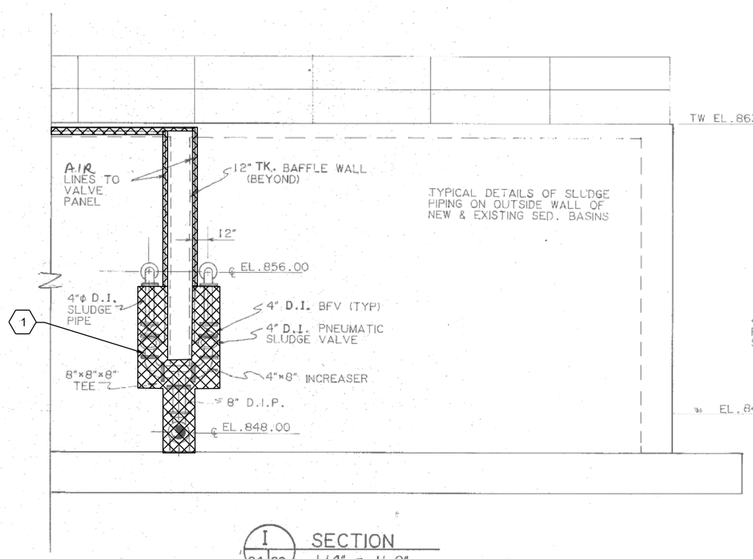

I 24/29 SECTION
1/4" = 1'-0"

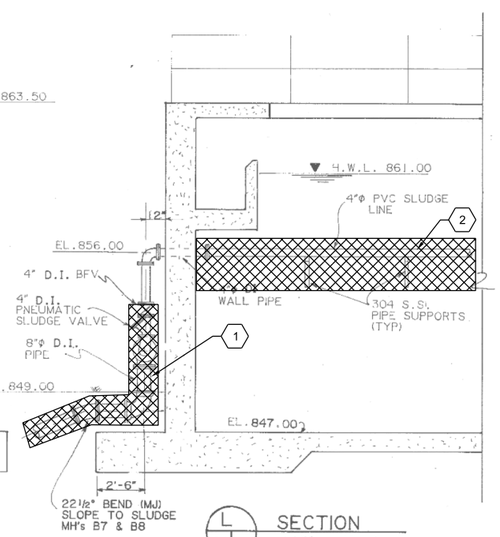

L 24/29 SECTION
1/4" = 1'-0"

SHEET KEYNOTES

1. DEMOLISH EXISTING EXTERIOR PIPING BEGINNING AT OUTLET FLANGE FROM 90° ELBOW. DEMOLITION CONTINUES WITH YARD PIPING TO POINT OF CONNECTION WITH EXISTING PIPING. TYPICAL OF BASIN PAIRS 1 AND 2, 3 AND 4, 5 AND 6, 7 AND 8.
2. DEMOLISH EXISTING 4" PVC SLUDGE PIPING AND PIPE SUPPORTS INSIDE BASINS.

NO.	DATE	REVISION	BY	APVD

DSGN	DR	CHK	APVD
M RAM	M HALES	J HORTON	E MINCHEW

Jacobs
10 10TH STREET, SUITE 1400
ATLANTA, GA 30309
GA LIC # PEF000350 (EXP 6/30/2022)

CROSSTOWN AND SOUTH FAYETTE WTP
HOSELESS SOLIDS COLLECTION SYSTEM

FAYETTE COUNTY WATER SYSTEM
FAYETTE COUNTY, GEORGIA

PROCESS MECHANICAL
CROSSTOWN WTP
SEDIMENTATION BASINS 5-8
DEMOLITION - DISCHARGE PIPING

REUSE OF DOCUMENTS: THIS DOCUMENT, AND THE IDEAS AND DESIGNS INCORPORATED HEREIN, AS AN INSTRUMENT OF PROFESSIONAL SERVICE, IS THE PROPERTY OF JACOBS AND IS NOT TO BE USED, IN WHOLE OR IN PART, FOR ANY OTHER PROJECT WITHOUT THE WRITTEN AUTHORIZATION OF JACOBS.
© JACOBS 2021. ALL RIGHTS RESERVED.

VERIFY SCALE
BAR IS ONE INCH ON ORIGINAL DRAWING.
0 1"

DATE	MARCH 2021
PROJ	D3101212
DWG	CT-10-M-103
SHEET	16 of 36

BID DOCUMENTS

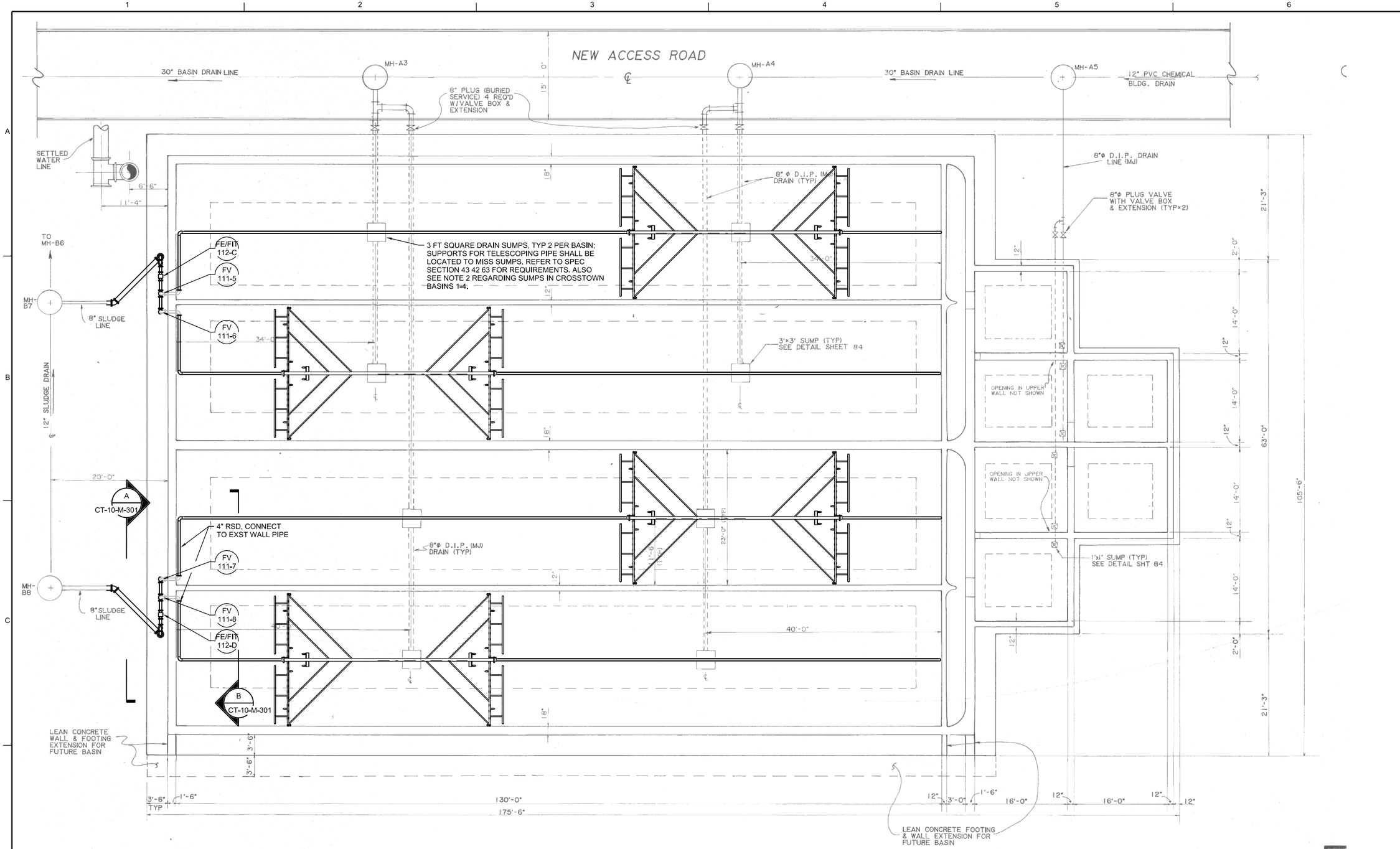

SEDIMENTATION BASINS 5-8 LOWER PLAN

1/8"=1'-0"

GENERAL NOTES

1. LOWER PLAN FOR SEDIMENTATION BASINS 1-4 WILL BE SIMILAR. SEE SPECIFICATIONS FOR BASIN DIMENSIONS. SEE P&IDS FOR EQUIPMENT TAG NUMBERS.
2. DRAINAGE SUMPS FOR CROSSTOWN BASINS 1-4 ARE LOCATED BELOW WALLS SEPARATING BASINS 1 AND 2 AND BASINS 3 AND 4. SEE SPECIFICATION SECTION 44 42 63 FOR REQUIREMENTS WHERE SLUDGE COLLECTOR UNITS CROSS OVER SUMPS.

NO.	DATE	REVISION	BY	APVD

DSGN M RAM | DR M HALES | CHK J HORTON | APVD E MINCHEW

Jacobs
10 10TH STREET, SUITE 1400
ATLANTA, GA 30309
GA LIC # PEF000350 (EXP 6/30/2022)

CROSSTOWN AND SOUTH FAYETTE WTP
HOSELESS SOLIDS COLLECTION SYSTEM

FAYETTE COUNTY WATER SYSTEM
FAYETTE COUNTY, GEORGIA

PROCESS MECHANICAL
CROSSTOWN WTP
SEDIMENTATION BASINS 5-8
LOWER PLAN

REUSE OF DOCUMENTS: THIS DOCUMENT, AND THE IDEAS AND DESIGNS INCORPORATED HEREIN, AS AN INSTRUMENT OF PROFESSIONAL SERVICE, IS THE PROPERTY OF JACOBS AND IS NOT TO BE USED, IN WHOLE OR IN PART, FOR ANY OTHER PROJECT WITHOUT THE WRITTEN AUTHORIZATION OF JACOBS.
© JACOBS 2021. ALL RIGHTS RESERVED.

VERIFY SCALE
BAR IS ONE INCH ON ORIGINAL DRAWING.
0 1"

DATE	MARCH 2021
PROJ	D3101212
DWG	CT-10-M-201
SHEET	17 of 36

BID DOCUMENTS

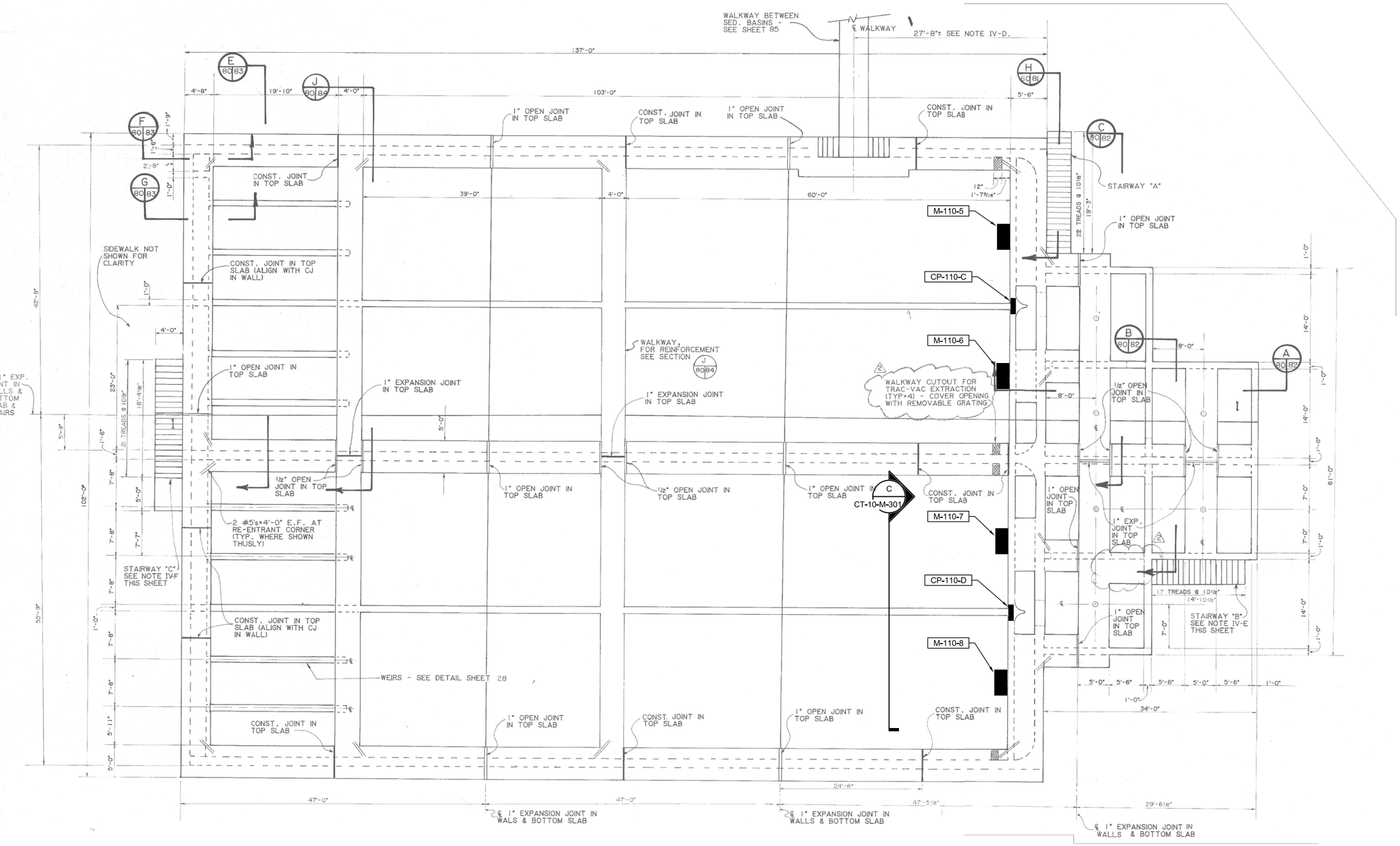

SEDIMENTATION BASINS 5-8 UPPER PLAN

1/8"=1'-0"

GENERAL NOTES

1. UPPER PLAN FOR SEDIMENTATION BASINS 1-4 WILL BE SIMILAR. SEE SPECIFICATIONS FOR BASIN DIMENSIONS. SEE P&IDS FOR EQUIPMENT TAG NUMBERS.

NO.	DATE	REVISION	BY	APVD

DSGN M RAM | DR M HALES | CHK J HORTON | APVD E MINCHEW

Jacobs

10 10TH STREET, SUITE 1400
ATLANTA, GA 30309
GA LIC # PEF000350 (EXP 6/30/2022)

CROSSTOWN AND SOUTH FAYETTE WTP
HOSELESS SOLIDS COLLECTION SYSTEM

FAYETTE COUNTY WATER SYSTEM
FAYETTE COUNTY, GEORGIA

PROCESS MECHANICAL
CROSSTOWN WTP
SEDIMENTATION BASINS 5-8
UPPER PLAN

REUSE OF DOCUMENTS: THIS DOCUMENT, AND THE IDEAS AND DESIGNS INCORPORATED HEREIN, AS AN INSTRUMENT OF PROFESSIONAL SERVICE, IS THE PROPERTY OF JACOBS AND IS NOT TO BE USED, IN WHOLE OR IN PART, FOR ANY OTHER PROJECT WITHOUT THE WRITTEN AUTHORIZATION OF JACOBS.

© JACOBS 2021. ALL RIGHTS RESERVED.

VERIFY SCALE
BAR IS ONE INCH ON ORIGINAL DRAWING.
0 1"

DATE	MARCH 2021
PROJ	D3101212
DWG	CT-10-M-202
SHEET	18 of 36

BID DOCUMENTS

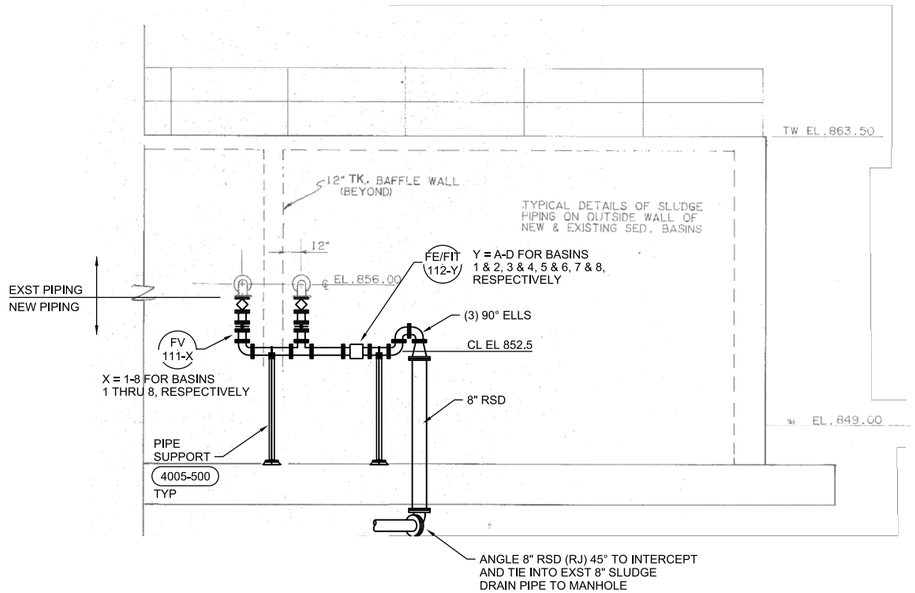

A SECTION
1/4"=1'-0"
CT-10-M-201

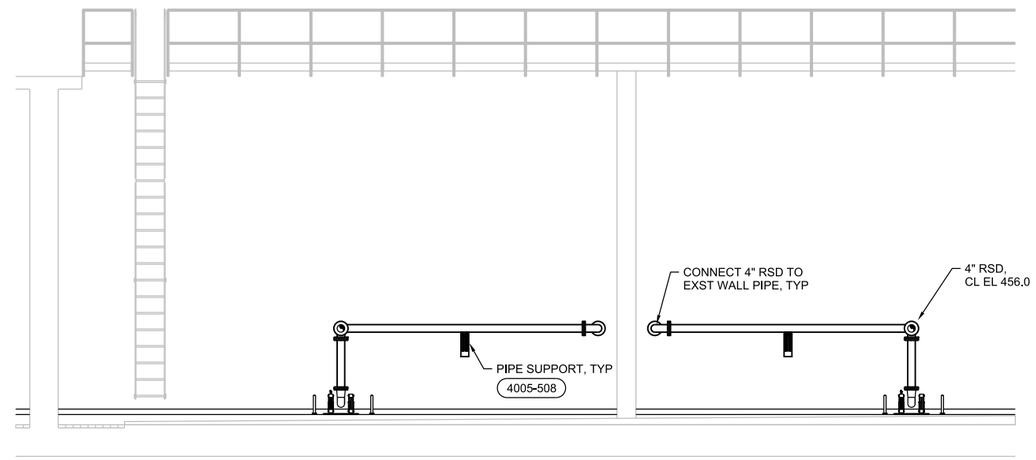

B SECTION
1/4"=1'-0"
CT-10-M-201

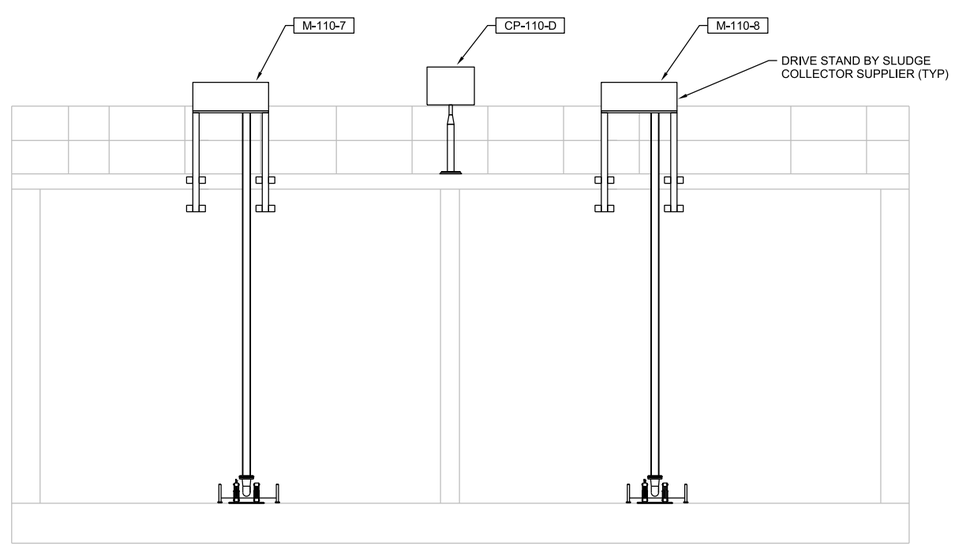

C SECTION
1/4"=1'-0"
CT-10-M-202

NO.	DATE	REVISION	BY	APVD

DSGN	DR	CHK	APVD
M RAM	M HALES	J HORTON	E MINCHEW

Jacobs
10 10TH STREET, SUITE 1400
ATLANTA, GA 30309
GA LIC # PEF000350 (EXP 6/30/2022)

CROSSTOWN AND SOUTH FAYETTE WTP
HOSELESS SOLIDS COLLECTION SYSTEM

FAYETTE COUNTY WATER SYSTEM
FAYETTE COUNTY, GEORGIA

PROCESS MECHANICAL

CROSSTOWN WTP DISCHARGE PIPING SECTIONS

REUSE OF DOCUMENTS: THIS DOCUMENT, AND THE IDEAS AND DESIGNS INCORPORATED HEREIN, AS AN INSTRUMENT OF PROFESSIONAL SERVICE, IS THE PROPERTY OF JACOBS AND IS NOT TO BE USED, IN WHOLE OR IN PART, FOR ANY OTHER PROJECT WITHOUT THE WRITTEN AUTHORIZATION OF JACOBS.

© JACOBS 2021. ALL RIGHTS RESERVED.

VERIFY SCALE
BAR IS ONE INCH ON ORIGINAL DRAWING.
0 1"

DATE	MARCH 2021
PROJ	D3101212
DWG	CT-10-M-301
SHEET	19 of 36

BID DOCUMENTS

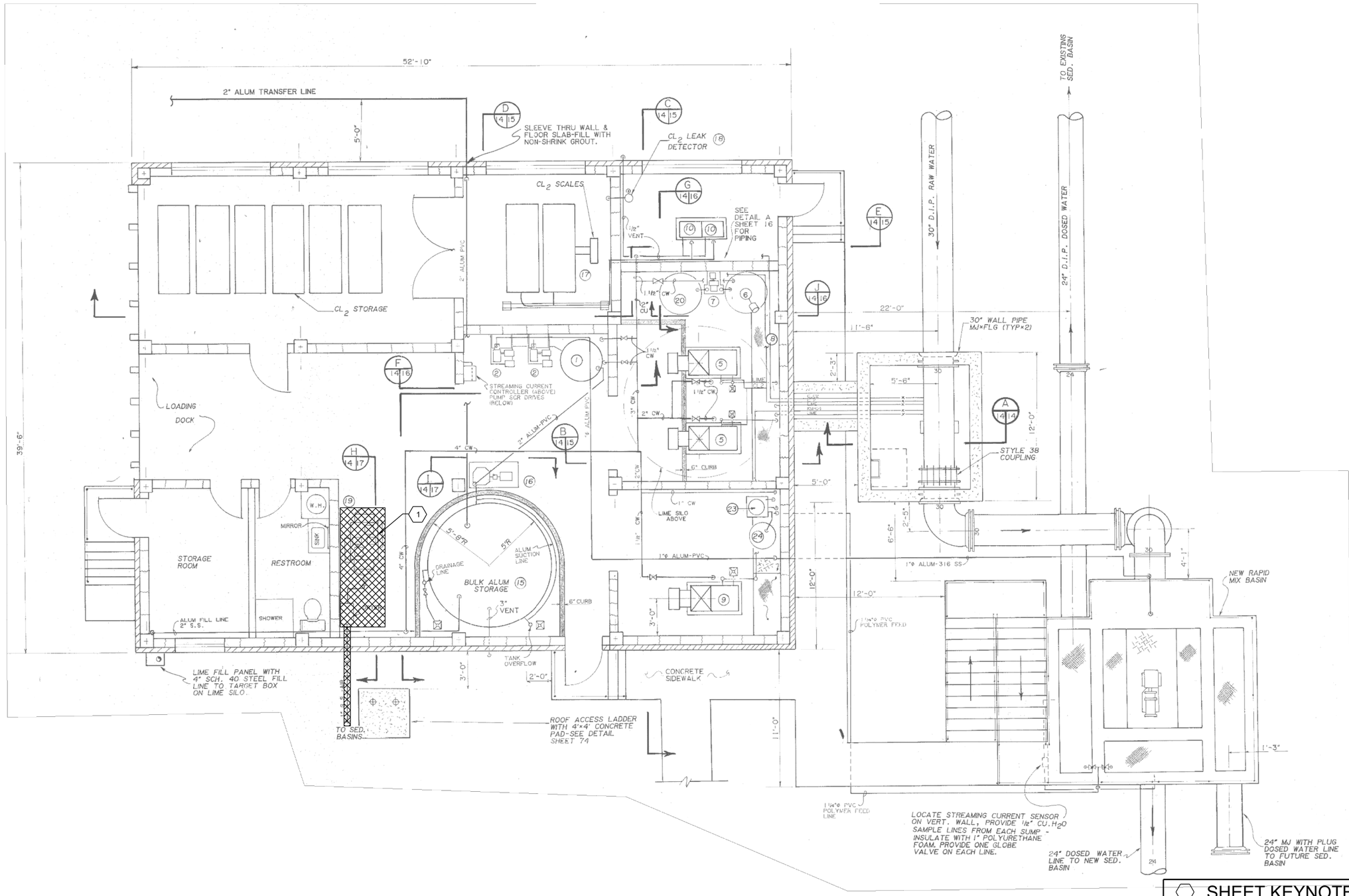

CHEMICAL BUILDING - DEMOLITION PLAN

1/4"=1'-0"

SHEET KEYNOTES

1. DEMOLISH SLUDGE COLLECTOR SYSTEM'S AIR COMPRESSORS, RECEIVER TANK, EQUIPMENT PADS, FILTERS, DRYER, AND PIPING TO EACH OF FOUR PNEUMATIC CONTROL PANELS ON TOP OF SEDIMENTATION BASINS. DEMOLISH EQUIPMENT PAD PER DETAIL 0330-143 AND REPAIR CONCRETE AS INDICATED ON STRUCTURAL GENERAL NOTES, DWG 01-G-003. FILL HOLE WITH COLORED GROUT TO MATCH COLOR OF EXTERIOR BRICK.

NO.	DATE	REVISION	BY	APVD

DSGN	DR	CHK	APVD
M RAM	M HALES	J HORTON	E MINCHEW

Jacobs
10 10TH STREET, SUITE 1400
ATLANTA, GA 30309
GA LIC # PEF000350 (EXP 6/30/2022)

CROSSTOWN AND SOUTH FAYETTE WTP
HOSELESS SOLIDS COLLECTION SYSTEM

FAYETTE COUNTY WATER SYSTEM
FAYETTE COUNTY, GEORGIA

PROCESS MECHANICAL
CROSSTOWN WTP
CHEMICAL BUILDING - DEMOLITION
AIR COMPRESSOR SYSTEM

REUSE OF DOCUMENTS: THIS DOCUMENT, AND THE IDEAS AND DESIGNS INCORPORATED HEREIN, AS AN INSTRUMENT OF PROFESSIONAL SERVICE, IS THE PROPERTY OF JACOBS AND IS NOT TO BE USED, IN WHOLE OR IN PART, FOR ANY OTHER PROJECT WITHOUT THE WRITTEN AUTHORIZATION OF JACOBS.
© JACOBS 2021. ALL RIGHTS RESERVED.

BID DOCUMENTS

VERIFY SCALE
BAR IS ONE INCH ON ORIGINAL DRAWING.
0 1"

DATE	MARCH 2021
PROJ	D3101212
DWG	CT-20-M-104
SHEET	20 of 36

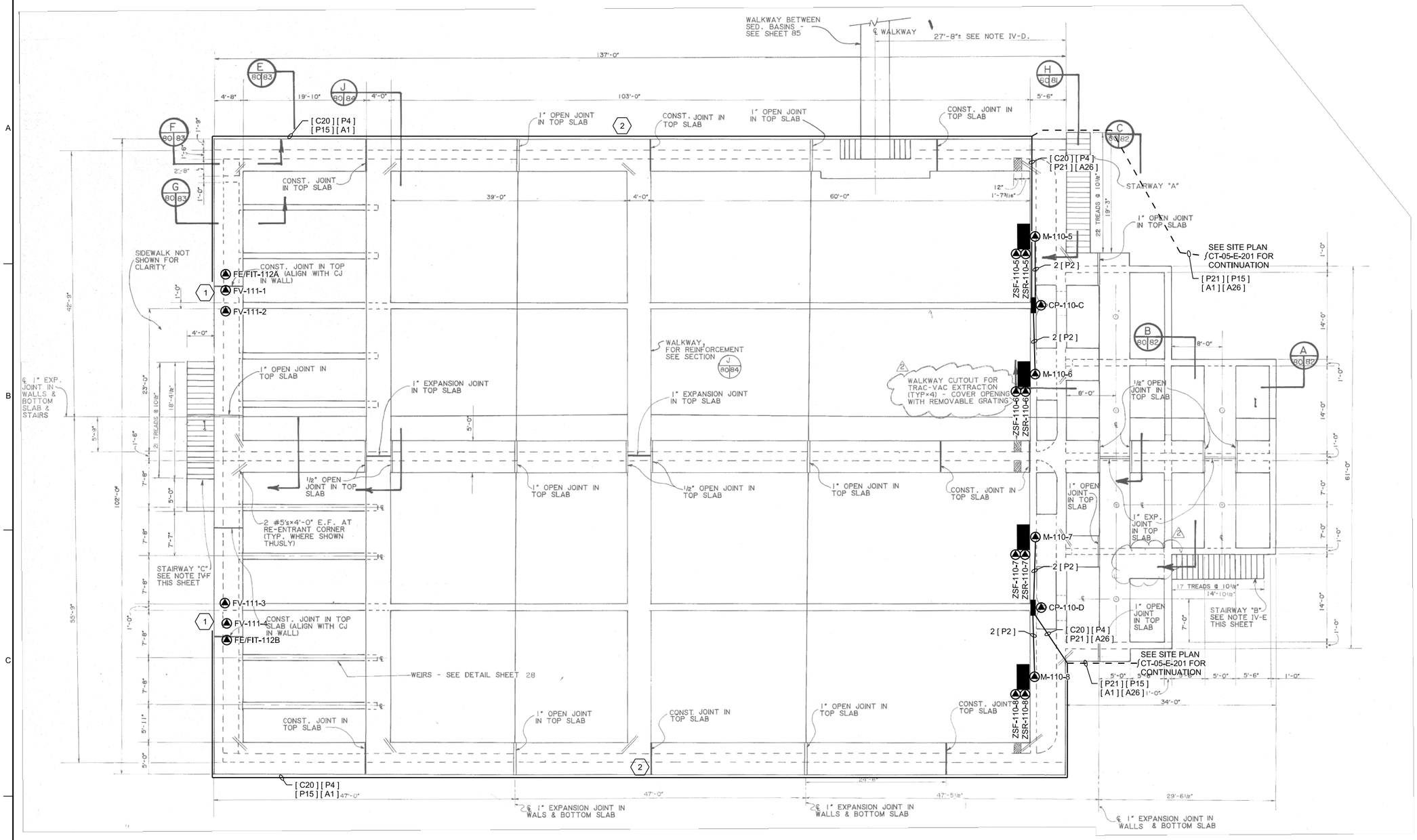

SEDIMENTATION BASINS 5-8 UPPER PLAN

1/8"=1'-0"

GENERAL SHEET NOTES

1. DRAWING SHOWS LAYOUT AND WIRING FOR BASINS 5-8 ONLY. SIMILAR LAYOUT AND WIRING FOR BASINS 1-4.
2. SEE DRAWING CT-10-E-601 FOR WIRING DIAGRAMS.

SHEET KEYNOTES

1. VALVES AND FLOW METER LOCATED ON LOWER LEVEL. SEE DRAWING CT-10-M-201 AND CT-10-M-203 FOR VALVE AND INSTRUMENT LOCATIONS.
2. ROUTE CONDUITS EXPOSED ALONG SIDE OF BASIN.
3. ROUTE CONDUIT UNDER GRADING OR ALONG WALKWAY.

NO.	DATE	REVISION	BY	APVD

DSGN KB HORTON | DR G MESSER | CHK T HOMAYOONI | APVD KB HORTON

Jacobs

10 10TH STREET, SUITE 1400
ATLANTA, GA 30309
GA LIC # PEF000350 (EXP 6/30/2022)

CROSSTOWN AND SOUTH FAYETTE WTP HOSELESS SOLIDS COLLECTION SYSTEM

FAYETTE COUNTY WATER SYSTEM
FAYETTE COUNTY, GEORGIA

ELECTRICAL
CROSSTOWN WTP
SEDIMENTATION BASINS 5-8
UPPER POWER PLAN

REUSE OF DOCUMENTS: THIS DOCUMENT, AND THE IDEAS AND DESIGNS INCORPORATED HEREIN, AS AN INSTRUMENT OF PROFESSIONAL SERVICE, IS THE PROPERTY OF JACOBS AND IS NOT TO BE USED, IN WHOLE OR IN PART, FOR ANY OTHER PROJECT WITHOUT THE WRITTEN AUTHORIZATION OF JACOBS.
© JACOBS 2021. ALL RIGHTS RESERVED.

VERIFY SCALE
BAR IS ONE INCH ON ORIGINAL DRAWING.
0 1"

DATE	MARCH 2021
PROJ	D3101212
DWG	CT-10-E-201
SHEET	21 of 36

BID DOCUMENTS

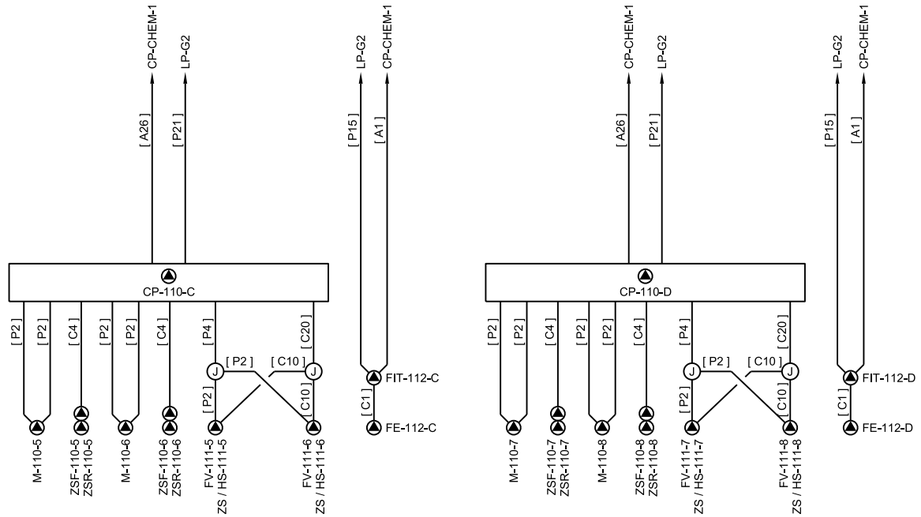

BASINS 5-8 WIRING DIAGRAM

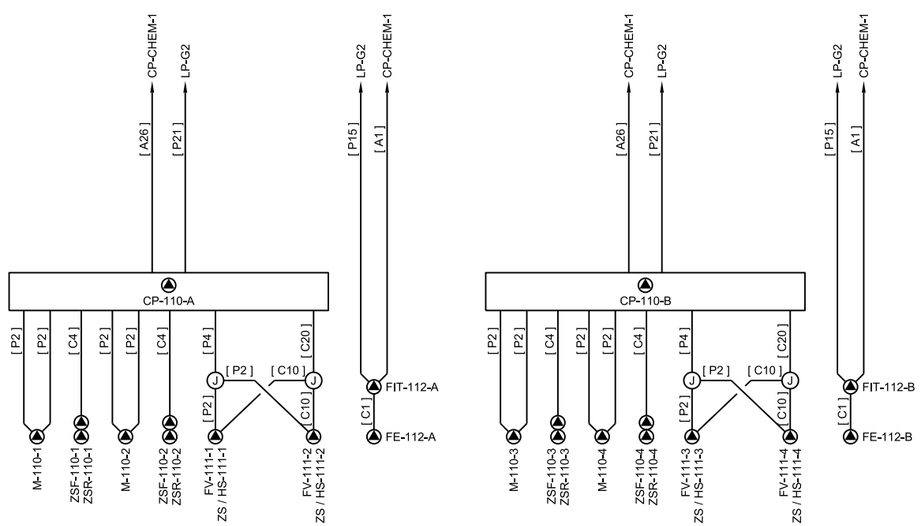

BASINS 1-4 WIRING DIAGRAM

10 10TH STREET, SUITE 1400
ATLANTA, GA 30309
GA LIC # PEF000350 (EXP 6/30/2022)

Jacobs

ELECTRICAL
CROSSTOWN WTP
SEDIMENTATION BASINS
WIRING DIAGRAMS

CROSSTOWN AND SOUTH FAYETTE WTP
HOSELESS SOLIDS COLLECTION SYSTEM

FAYETTE COUNTY WATER SYSTEM
FAYETTE COUNTY, GEORGIA

REUSE OF DOCUMENTS: THIS DOCUMENT, AND THE IDEAS AND DESIGNS INCORPORATED HEREIN, AS AN INSTRUMENT OF PROFESSIONAL SERVICE, IS THE PROPERTY OF JACOBS AND IS NOT TO BE USED, IN WHOLE OR IN PART, FOR ANY OTHER PROJECT WITHOUT THE WRITTEN AUTHORIZATION OF JACOBS.

NO.	DATE	REVISION	BY	APVD

DSGN KB HORTON | DR G MESSER | CHK T HOMAYOONI | APVD KB HORTON

VERIFY SCALE
BAR IS ONE INCH ON ORIGINAL DRAWING.
0 1"

DATE	MARCH 2021
PROJ	D3101212
DWG	CT-10-E-601
SHEET	22 of 36

BID DOCUMENTS

© JACOBS 2021. ALL RIGHTS RESERVED.

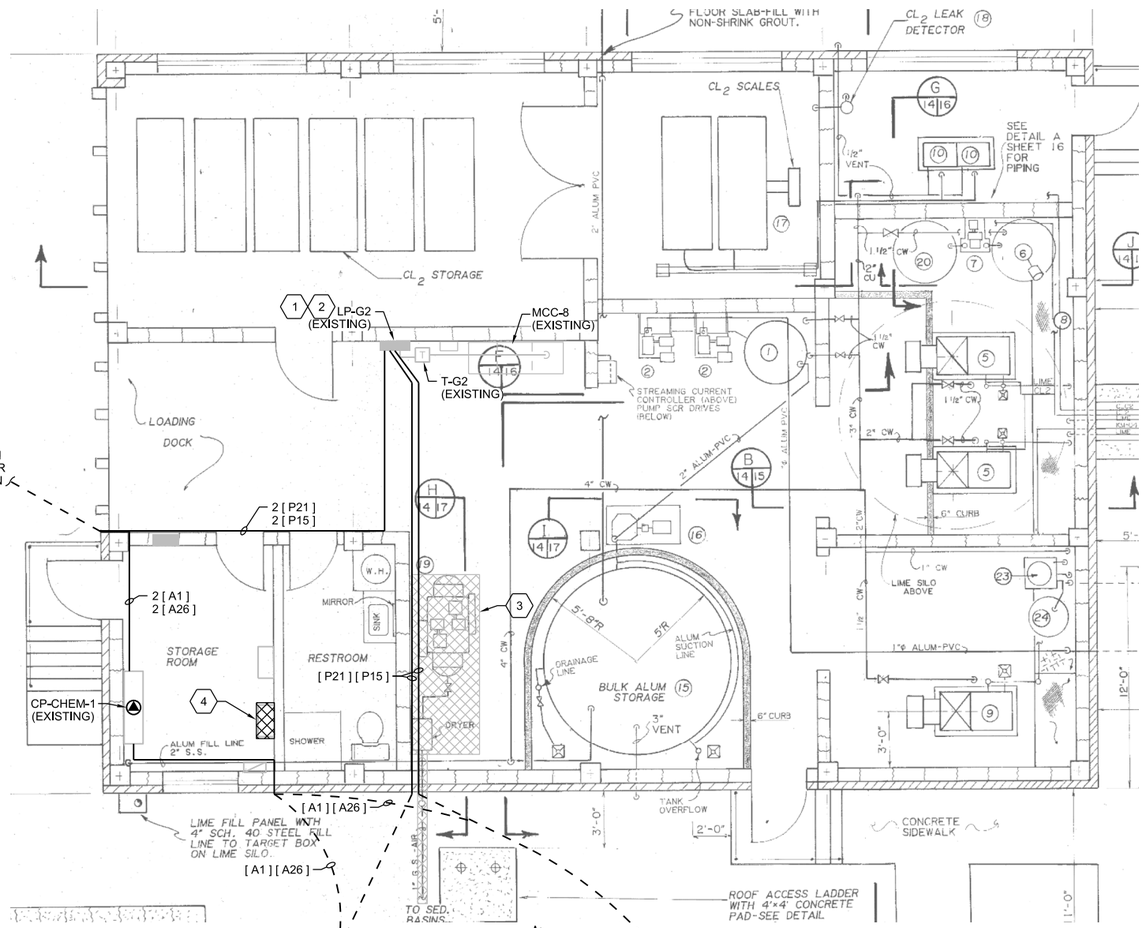

PLAN

1/4"=1'-0"

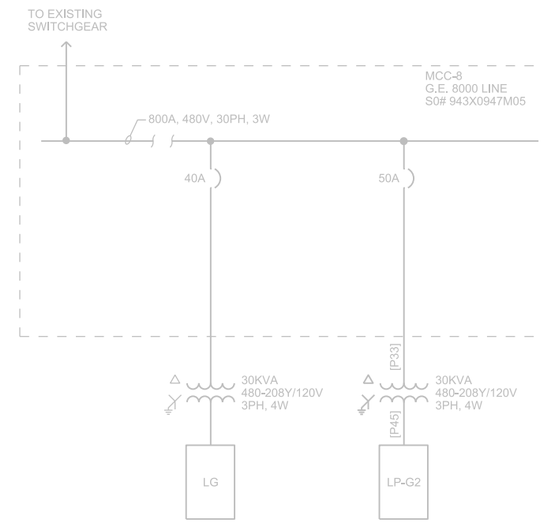

MCC-8 ONE LINE DIAGRAM

NTS

PANEL: EXISTING LP-G2 | LOCATION: CROSSTOWN CHEMICAL BUILDING
SERVICE VOLTAGE: 208/120V | PHASE: 3 | WIRE: 4
TOTAL LOAD KVA: 10.4 | BUS SIZE: 100A | MAIN SIZE: 100A | TYPE: MCB
REMARKS: SPD; * PROVIDE EGFI BREAKERS | NEUTRAL: FULL | MOUNTING: SURFACE

LOAD IN KVA			CIRCUIT DESCRIPTION	BKR A/P	CKT NO.	CKT NO.	BKR A/P	CIRCUIT DESCRIPTION	LOAD IN KVA		
A	B	C							A	B	C
1.0			CP-620 CHLORINE DIOXIDE	20/1	1	2	20/1	LIT-622-1	0.1		
	0.1		AIT-620-6	20/1	3	4	20/1	LIT-623-1		0.1	
		0.5	CP-CHEM1	20/1	5	6	20/1	FP-622-1			0.2
1.5			**CP-110A**	**30/1**	7	8	20/1	FP-622-2	0.2		
	1.5		**CP-110B**	**30/1**	9	10	**30/1**	**CP-110C**		**1.5**	
		0.2	**FIT-111A**	20/1	11	12	**30/1**	**CP-110D**			**1.5**
0.2			**FIT-111B**	20/1	13	14	20/1	**FIT-111C**	**0.2**		
			SPARE	20/1	15	16	20/1	**FIT-111D**		**0.2**	
			SPARE	20/1	17	18	20/1	SPARE			
0.2			HT-PUR	20/1*	19	20	20/1*	SPARE			
	0.2		HT-SU, HT-W1	20/1*	21	22	20/1*	SPARE			
		1.0	PURATE TANK HEATER	20/1*	23	24	20/1*	SPARE			
			SPARE	20/2*	25	26	1P	SPACE			
					27	28	1P	SPACE			
			SPACE	1P	29	30	1P	SPACE			
			SPACE	1P	31	32	1P	SPACE			
			SPACE	1P	33	34	1P	SPACE			
			SPACE	1P	35	36	1P	SPACE			
			SPACE	1P	37	38	1P	SPACE			
			SPACE	1P	39	40	1P	SPACE			
			SPACE	1P	41	42	1P	SPACE			
2.9	1.8	1.7	TOTAL						0.5	1.8	1.7

SHEET KEYNOTES

1. REPLACE EXISTING CIRCUIT BREAKER WITH 30A/1P BREAKER.
2. USE EXISTING 20A/1P SPARE FOR NEW INSTRUMENT.
3. DEMOLISH EXPOSED CONDUIT ASSOCIATED WITH AIR COMPRESSOR. CUT AND CAP CONDUIT AT SLAB. REMOVE CONDUCTORS BACK TO SOURCE.
4. DEMOLISH EXISTING TRAC-VAC CONTROL PANEL; REMOVE WIRES BACK TO SOURCE.

NO.	DATE	REVISION	BY	APVD

DSGN KB HORTON | DR G MESSER | CHK T HOMAYOONI | APVD KB HORTON

10 10TH STREET, SUITE 1400
ATLANTA, GA 30309
GA LIC # PEF000350 (EXP 6/30/2022)

CROSSTOWN AND SOUTH FAYETTE WTP
HOSELESS SOLIDS COLLECTION SYSTEM

FAYETTE COUNTY WATER SYSTEM
FAYETTE COUNTY, GEORGIA

ELECTRICAL
CROSSTOWN WTP
CHEMICAL BUILDING
PLAN

REUSE OF DOCUMENTS: THIS DOCUMENT, AND THE IDEAS AND DESIGNS INCORPORATED HEREIN, AS AN INSTRUMENT OF PROFESSIONAL SERVICE, IS THE PROPERTY OF JACOBS AND IS NOT TO BE USED, IN WHOLE OR IN PART, FOR ANY OTHER PROJECT WITHOUT THE WRITTEN AUTHORIZATION OF JACOBS.
© JACOBS 2021. ALL RIGHTS RESERVED.

VERIFY SCALE
BAR IS ONE INCH ON ORIGINAL DRAWING.
0 1"

DATE	MARCH 2021
PROJ	D3101212
DWG	CT-20-E-201
SHEET	23 of 36

BID DOCUMENTS

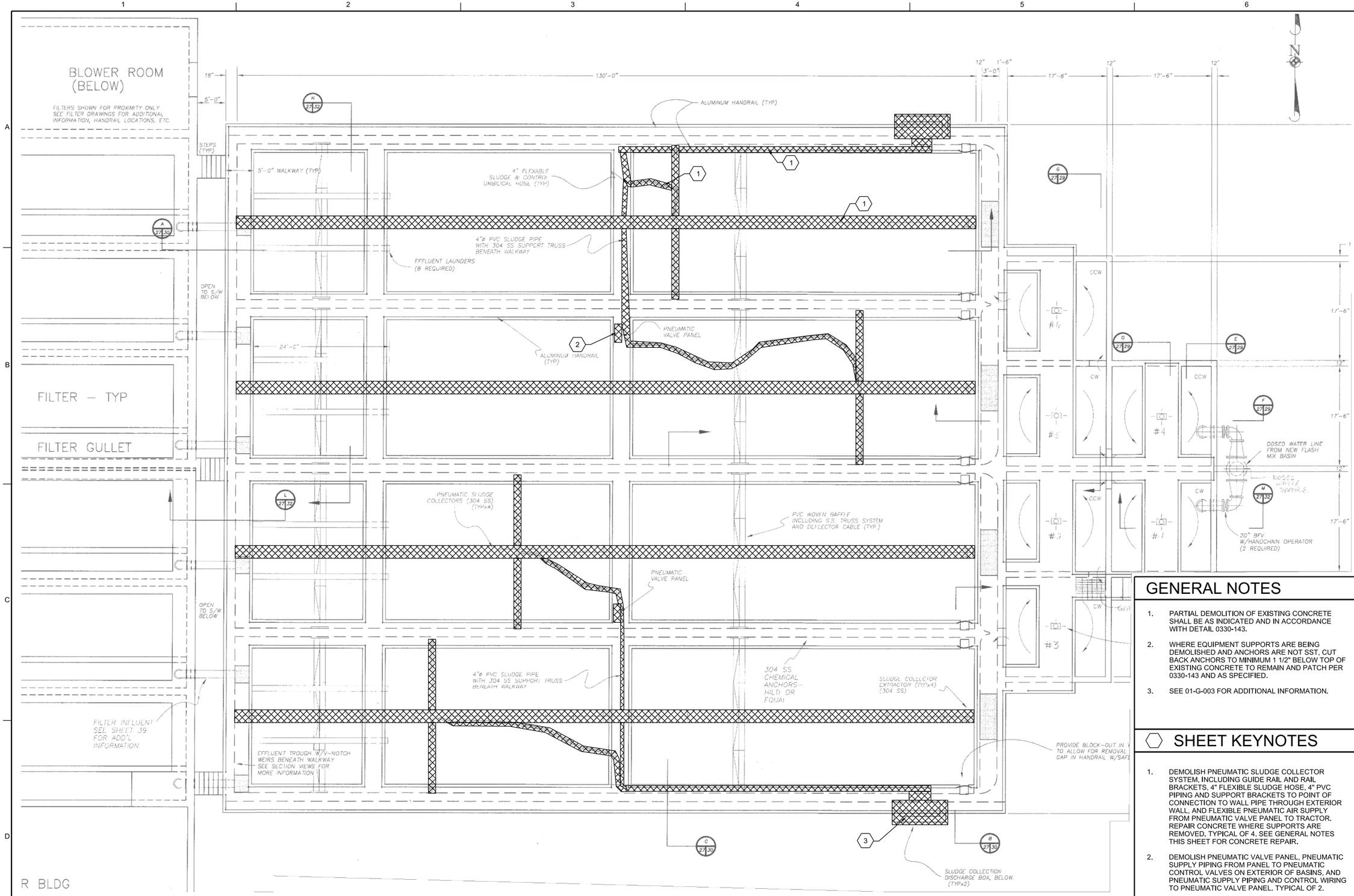

DEMOLITION PLAN - SEDIMENTATION BASINS 1-4

1/8"=1'-0"

GENERAL NOTES

1. PARTIAL DEMOLITION OF EXISTING CONCRETE SHALL BE AS INDICATED AND IN ACCORDANCE WITH DETAIL 0330-143.
2. WHERE EQUIPMENT SUPPORTS ARE BEING DEMOLISHED AND ANCHORS ARE NOT SST, CUT BACK ANCHORS TO MINIMUM 1 1/2" BELOW TOP OF EXISTING CONCRETE TO REMAIN AND PATCH PER 0330-143 AND AS SPECIFIED.
3. SEE 01-G-003 FOR ADDITIONAL INFORMATION.

SHEET KEYNOTES

1. DEMOLISH PNEUMATIC SLUDGE COLLECTOR SYSTEM, INCLUDING GUIDE RAIL AND RAIL BRACKETS, 4" FLEXIBLE SLUDGE HOSE, 4" PVC PIPING AND SUPPORT BRACKETS TO POINT OF CONNECTION TO WALL PIPE THROUGH EXTERIOR WALL, AND FLEXIBLE PNEUMATIC AIR SUPPLY FROM PNEUMATIC VALVE PANEL TO TRACTOR. REPAIR CONCRETE WHERE SUPPORTS ARE REMOVED. TYPICAL OF 4. SEE GENERAL NOTES THIS SHEET FOR CONCRETE REPAIR.
2. DEMOLISH PNEUMATIC VALVE PANEL. PNEUMATIC SUPPLY PIPING FROM PANEL TO PNEUMATIC CONTROL VALVES ON EXTERIOR OF BASINS, AND PNEUMATIC SUPPLY PIPING AND CONTROL WIRING TO PNEUMATIC VALVE PANEL. TYPICAL OF 2.
3. DEMOLISH THE SLUDGE COLLECTION DISCHARGE BOX TO THE EXTENT SHOWN AND REPAIR AS INDICATED IN SHEET GENERAL NOTES. DO NOT CHIP INTO THE SURFACE OF THE EXISTING SLAB OR WALL TO REMAIN. TYP OF 2. SEE SECTION A, B, AND SLUDGE LINE DISCHARGE DETAIL ON SF-10-M-103.

NO.	DATE	REVISION	BY	APVD

DSGN	DR	CHK	APVD
M RAM	M HALES	J HORTON	E MINCHEW

Jacobs
10 10TH STREET, SUITE 1400
ATLANTA, GA 30309
GA LIC # PEF000350 (EXP 6/30/2022)

CROSSTOWN AND SOUTH FAYETTE WTP HOSELESS SOLIDS COLLECTION SYSTEM

FAYETTE COUNTY WATER SYSTEM
FAYETTE COUNTY, GEORGIA

PROCESS MECHANICAL

SOUTH FAYETTE WTP
SEDIMENTATION BASINS 1-4
DEMOLITION - PLAN

REUSE OF DOCUMENTS: THIS DOCUMENT, AND THE IDEAS AND DESIGNS INCORPORATED HEREIN, AS AN INSTRUMENT OF PROFESSIONAL SERVICE, IS THE PROPERTY OF JACOBS AND IS NOT TO BE USED, IN WHOLE OR IN PART, FOR ANY OTHER PROJECT WITHOUT THE WRITTEN AUTHORIZATION OF JACOBS.

© JACOBS 2021. ALL RIGHTS RESERVED.

VERIFY SCALE
BAR IS ONE INCH ON ORIGINAL DRAWING.
0 1"

DATE	MARCH 2021
PROJ	D3101212
DWG	SF-10-M-101
SHEET	24 of 36

BID DOCUMENTS

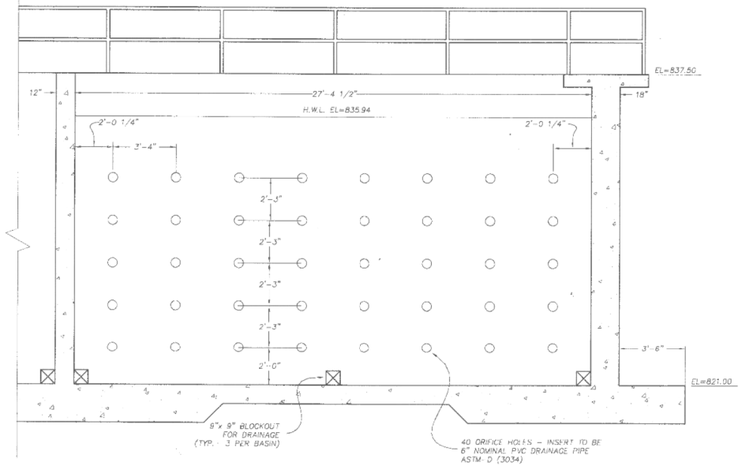

B 27 30 SECTION
1/4"= 1'-0"
SED. BASIN INFLUENT DISTRIBUTION WALL (BAFFLE WALL)

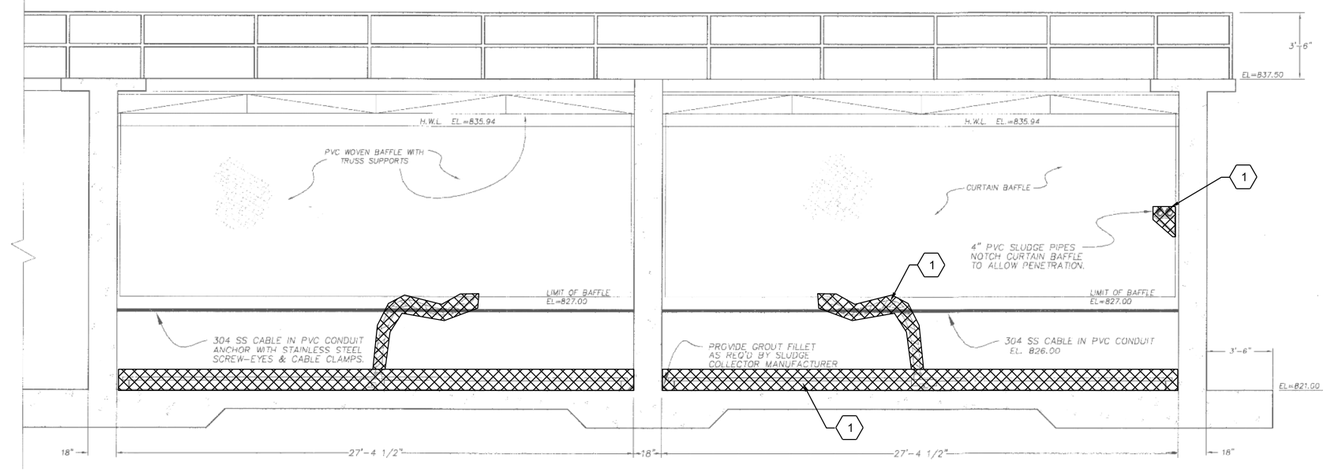

C 27 30 SECTION
1/4"= 1'-0"

NOTE:
CONTRACTOR SHALL ANCHOR PVC CURTAIN BAFFLE TO SIDEWALLS WITH CHEM. ANCHORS (HILTI OR EQUAL) CONSISTANT WITH MANUFACTURER'S RECOMMENDATIONS.

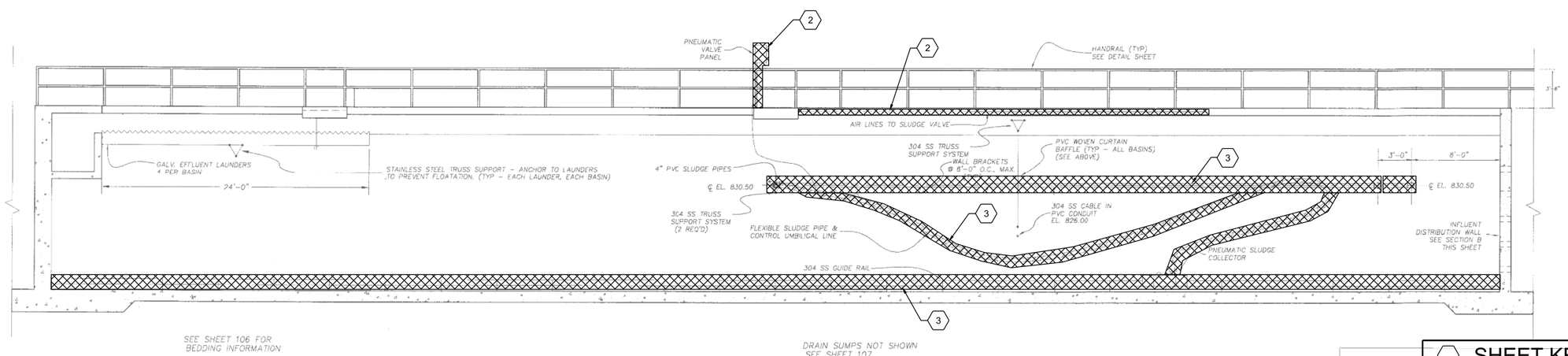

A 27 30 SECTION
3/16"= 1'-0"

SHEET KEYNOTES

1. DEMOLISH PNEUMATIC SLUDGE COLLECTOR SYSTEM. TYPICAL OF 4.
2. DEMOLISH PNEUMATIC VALVE PANEL, AIR SUPPLY LINES TO SLUDGE VALVES, AIR SUPPLY LINES FROM COMPRESSOR IN FILTER BUILDING TO PNEUMATIC VALVE PANEL AND CONTROL WIRING TO PNEUMATIC VALVE PANEL. TYPICAL OF 2.
3. DEMOLISH PNEUMATIC SLUDGE COLLECTOR, GUIDE RAIL AND BRACKETS, FLEXIBLE SLUDGE HOSE, AIR SUPPLY LINE FROM PNEUMATIC VALVE PANEL TO TRACTOR, AND SLUDGE DISCHARGE PIPING AND SUPPORTS TO POINT OF CONNECTION TO WALL PIPE. REPAIR CONCRETE WHERE SUPPORTS ARE REMOVED. TYPICAL OF 4. SEE SHEET GENERAL NOTES, DWG SF-10-M-101 FOR CONCRETE REPAIR.

DEMOLITION PLAN - SEDIMENTATION BASIN SECTIONS

NO.	DATE	REVISION	BY	APVD

DSGN M RAM | DR M HALES | CHK J HORTON | APVD E MINCHEW

Jacobs
10 10TH STREET, SUITE 1400
ATLANTA, GA 30309
GA LIC # PEF000350 (EXP 6/30/2022)

CROSSTOWN AND SOUTH FAYETTE WTP
HOSELESS SOLIDS COLLECTION SYSTEM
FAYETTE COUNTY WATER SYSTEM
FAYETTE COUNTY, GEORGIA

PROCESS MECHANICAL
SOUTH FAYETTE WTP
SEDIMENTATION BASINS 1-4
DEMOLITION - SECTIONS

REUSE OF DOCUMENTS: THIS DOCUMENT, AND THE IDEAS AND DESIGNS INCORPORATED HEREIN, AS AN INSTRUMENT OF PROFESSIONAL SERVICE, IS THE PROPERTY OF JACOBS AND IS NOT TO BE USED, IN WHOLE OR IN PART, FOR ANY OTHER PROJECT WITHOUT THE WRITTEN AUTHORIZATION OF JACOBS.
© JACOBS 2021. ALL RIGHTS RESERVED.

VERIFY SCALE
BAR IS ONE INCH ON ORIGINAL DRAWING.
0 1"

DATE	MARCH 2021
PROJ	D3101212
DWG	SF-10-M-102
SHEET	25 of 36

BID DOCUMENTS

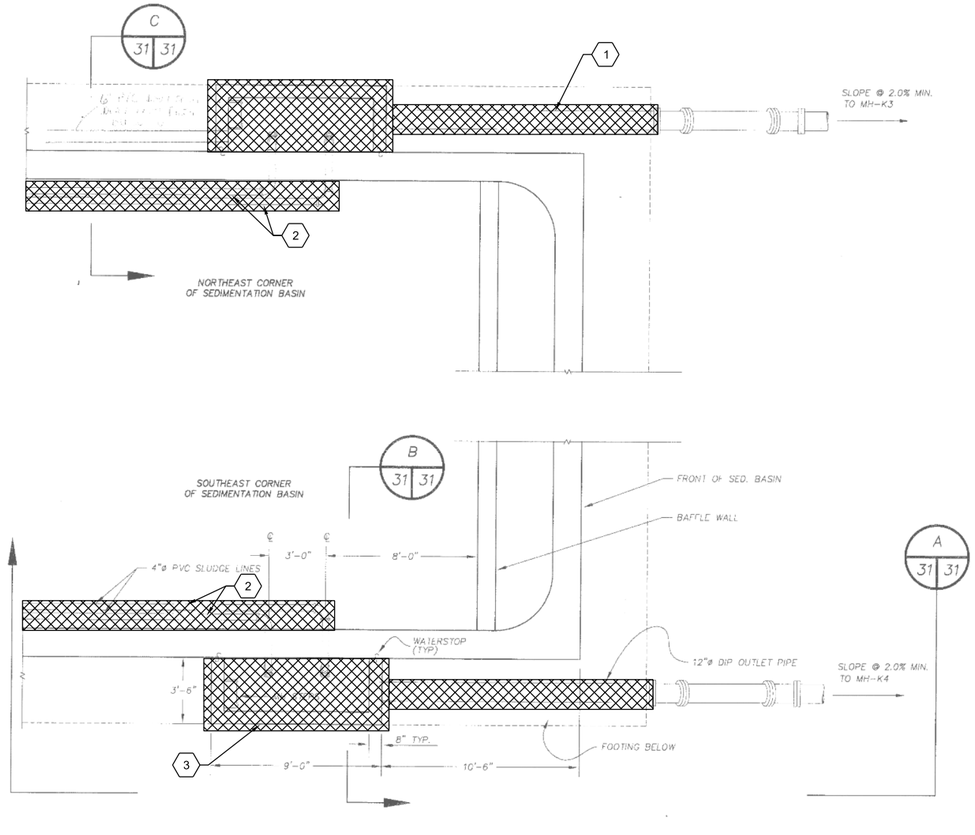

SLUDGE LINE DISCHARGE DETAIL
1/4"= 1'-0"

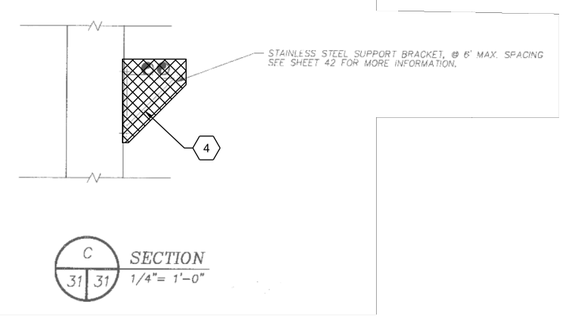

SECTION
1/4"= 1'-0"

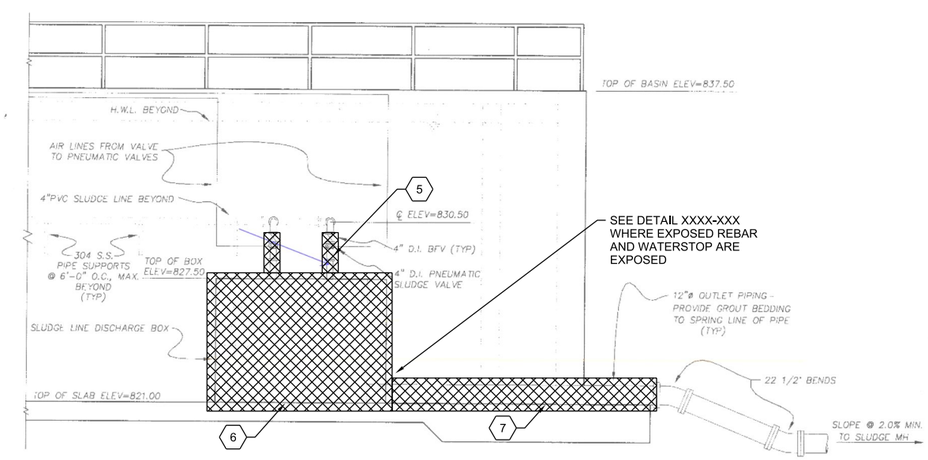

SECTION
1/4"= 1'-0"

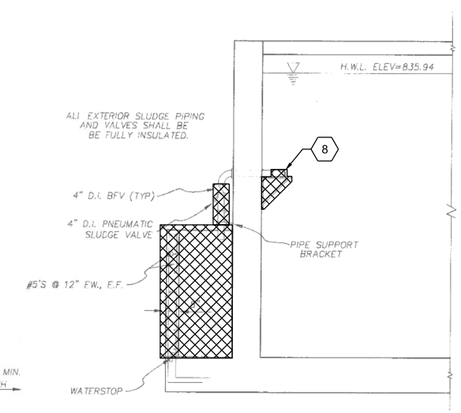

SECTION
1/4"= 1'-0"

DEMOLITION PLAN - SEDIMENTATION BASIN SECTIONS

SHEET KEYNOTES

1. DEMOLISH EXISTING 12" SLUDGE DISCHARGE PIPING TO 22.5° ELBOW. TYPICAL OF 2.
2. DEMOLISH 4" PVC SLUDGE PIPING INSIDE BASINS TO WALL PIPE; WALL PIPE WILL BE REUSED.
3. DEMOLISH SLUDGE DISCHARGE BOX, TYPICAL OF 2. REPAIR CONCRETE AS SPECIFIED AND SHOWN ON STRUCTURAL LEGEND DRAWING.
4. DEMOLISH 4" PVC SLUDGE DISCHARGE PIPES AND WALL BRACKETS. REPAIR CONCRETE WHERE BRACKETS ARE REMOVED.
5. DEMOLISH SLUDGE DISCHARGE PIPING BEGINNING AT 4" BUTTERFLY VALVE THROUGH PNEUMATIC VALVE TO END OF PIPE.
6. DEMOLISH SLUDGE DISCHARGE BOX, TYPICAL OF 2.
7. DEMOLISH 12" SLUDGE DISCHARGE PIPING TO FIRST ELBOW. TYPICAL OF 2.
8. DEMOLISH 4" PVC SLUDGE PIPING AND SUPPORT BRACKETS INSIDE BASINS TO WALL PIPE. WALL PIPE WILL BE REUSED. REPAIR CONCRETE WHERE WALL BRACKETS ARE REMOVED. SEE STRUCTURAL LEGEND DRAWING.

NO.	DATE	REVISION	BY	APVD

DSGN	DR	CHK	APVD
M RAM	M HALES	J HORTON	E MINCHEW

10 10TH STREET, SUITE 1400
ATLANTA, GA 30309
GA LIC # PEF000350 (EXP 6/30/2022)

CROSSTOWN AND SOUTH FAYETTE WTP
HOSELESS SOLIDS COLLECTION SYSTEM

FAYETTE COUNTY WATER SYSTEM
FAYETTE COUNTY, GEORGIA

Jacobs

PROCESS MECHANICAL
SOUTH FAYETTE WTP
SEDIMENTATION BASINS 1-4
DEMOLITION DISCHARGE PIPING

REUSE OF DOCUMENTS: THIS DOCUMENT, AND THE IDEAS AND DESIGNS INCORPORATED HEREIN, AS AN INSTRUMENT OF PROFESSIONAL SERVICE, IS THE PROPERTY OF JACOBS AND IS NOT TO BE USED, IN WHOLE OR IN PART, FOR ANY OTHER PROJECT WITHOUT THE WRITTEN AUTHORIZATION OF JACOBS.

©JACOBS 2021. ALL RIGHTS RESERVED.

VERIFY SCALE
BAR IS ONE INCH ON ORIGINAL DRAWING.
0 1"

DATE	MARCH 2021
PROJ	D3101212
DWG	SF-10-M-103
SHEET	26 of 36

BID DOCUMENTS

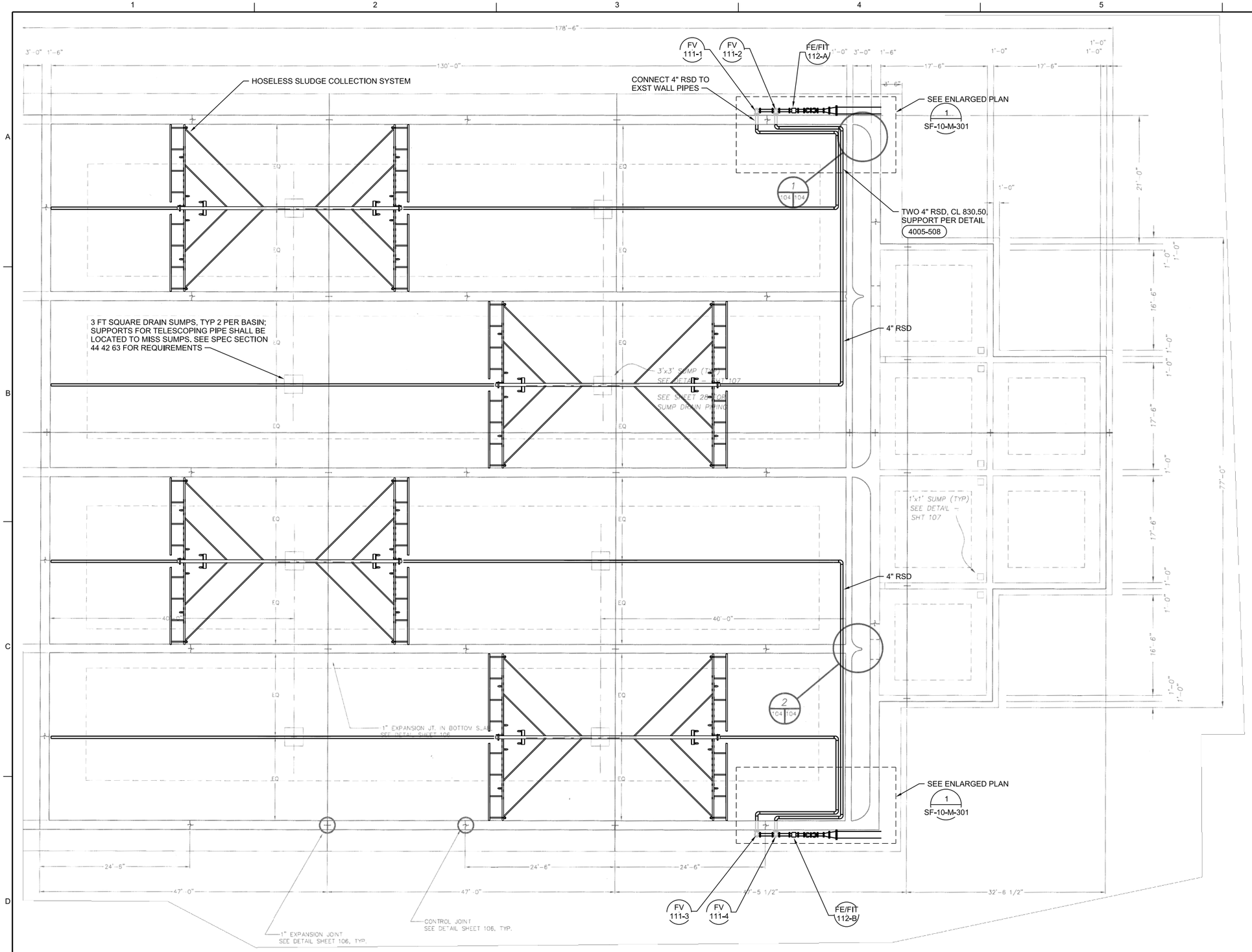

N

LOWER PLAN - SEDIMENTATION BASINS 1-4

1/8"=1'-0"

NO.	DATE	REVISION	BY	APVD

DSGN	DR	CHK	APVD
M RAM	M HALES	J HORTON	E MINCHEW

10 10TH STREET, SUITE 1400
ATLANTA, GA 30309
GA LIC # PEF000350 (EXP 6/30/2022)

CROSSTOWN AND SOUTH FAYETTE WTP
HOSELESS SOLIDS COLLECTION SYSTEM

FAYETTE COUNTY WATER SYSTEM
FAYETTE COUNTY, GEORGIA

PROCESS MECHANICAL

SOUTH FAYETTE WTP
SEDIMENTATION BASINS 1-4
LOWER PLAN

REUSE OF DOCUMENTS: THIS DOCUMENT, AND THE IDEAS AND DESIGNS INCORPORATED HEREIN, AS AN INSTRUMENT OF PROFESSIONAL SERVICE, IS THE PROPERTY OF JACOBS AND IS NOT TO BE USED, IN WHOLE OR IN PART, FOR ANY OTHER PROJECT WITHOUT THE WRITTEN AUTHORIZATION OF JACOBS.

© JACOBS 2021. ALL RIGHTS RESERVED.

VERIFY SCALE

BAR IS ONE INCH ON ORIGINAL DRAWING.
0 1"

DATE	MARCH 2021
PROJ	D3101212
DWG	SF-10-M-201
SHEET	27 of 36

BID DOCUMENTS

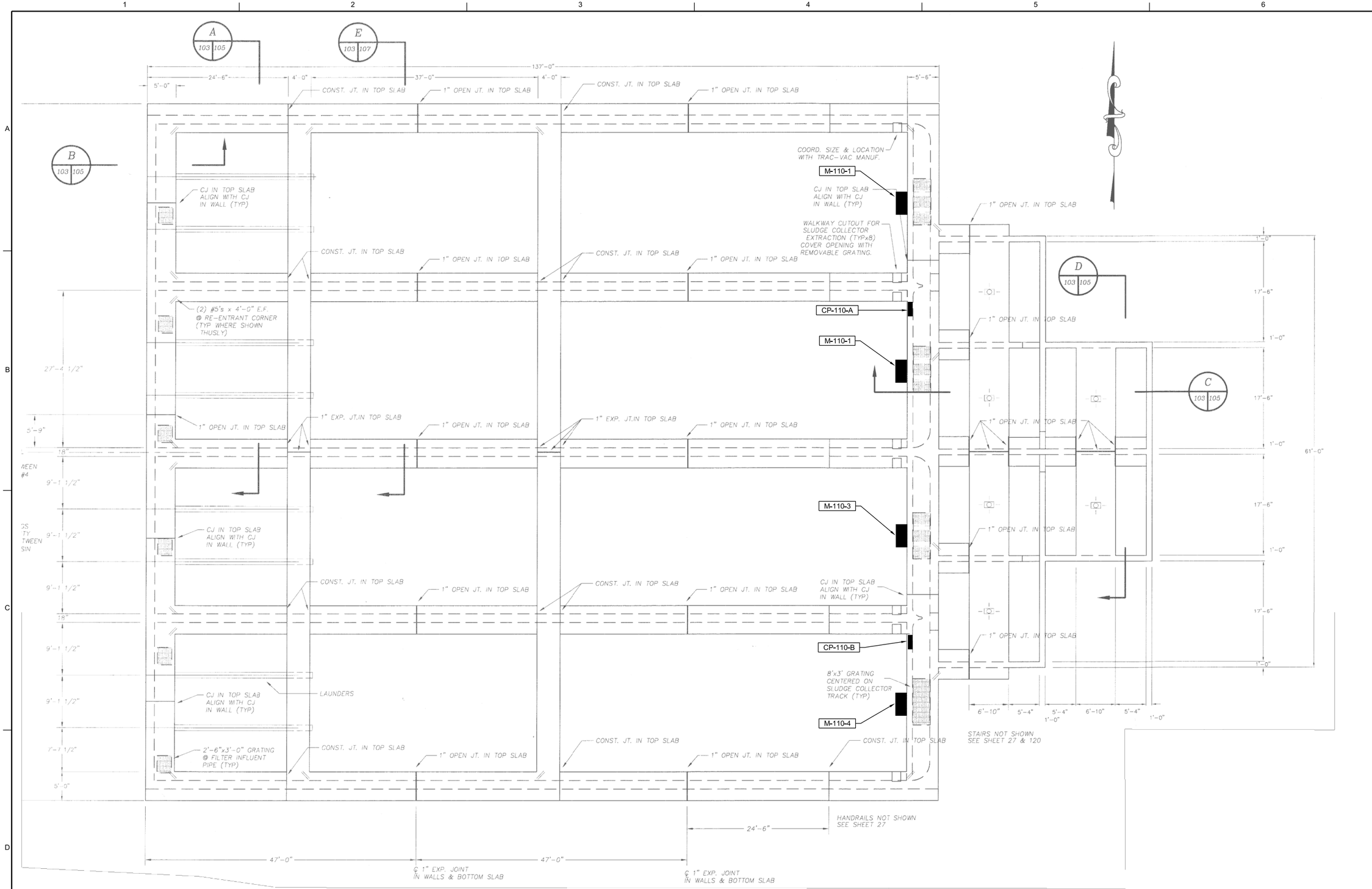

UPPER PLAN - SEDIMENTATION BASINS 1-4

1/8"=1'-0"

NO.	DATE	REVISION	BY	APVD

DSGN M RAM | DR M HALES | CHK J HORTON | APVD E MINCHEW

10 10TH STREET, SUITE 1400
ATLANTA, GA 30309
GA LIC # PEF000350 (EXP 6/30/2022)

CROSSTOWN AND SOUTH FAYETTE WTP
HOSELESS SOLIDS COLLECTION SYSTEM

FAYETTE COUNTY WATER SYSTEM
FAYETTE COUNTY, GEORGIA

PROCESS MECHANICAL

SOUTH FAYETTE WTP
SEDIMENTATION BASINS 1-4
UPPER PLAN

REUSE OF DOCUMENTS: THIS DOCUMENT, AND THE IDEAS AND DESIGNS INCORPORATED HEREIN, AS AN INSTRUMENT OF PROFESSIONAL SERVICE, IS THE PROPERTY OF JACOBS AND IS NOT TO BE USED, IN WHOLE OR IN PART, FOR ANY OTHER PROJECT WITHOUT THE WRITTEN AUTHORIZATION OF JACOBS.

© JACOBS 2021. ALL RIGHTS RESERVED.

VERIFY SCALE
BAR IS ONE INCH ON ORIGINAL DRAWING.
0 1"

DATE	MARCH 2021
PROJ	D3101212
DWG	SF-10-M-202
SHEET	28 of 36

BID DOCUMENTS

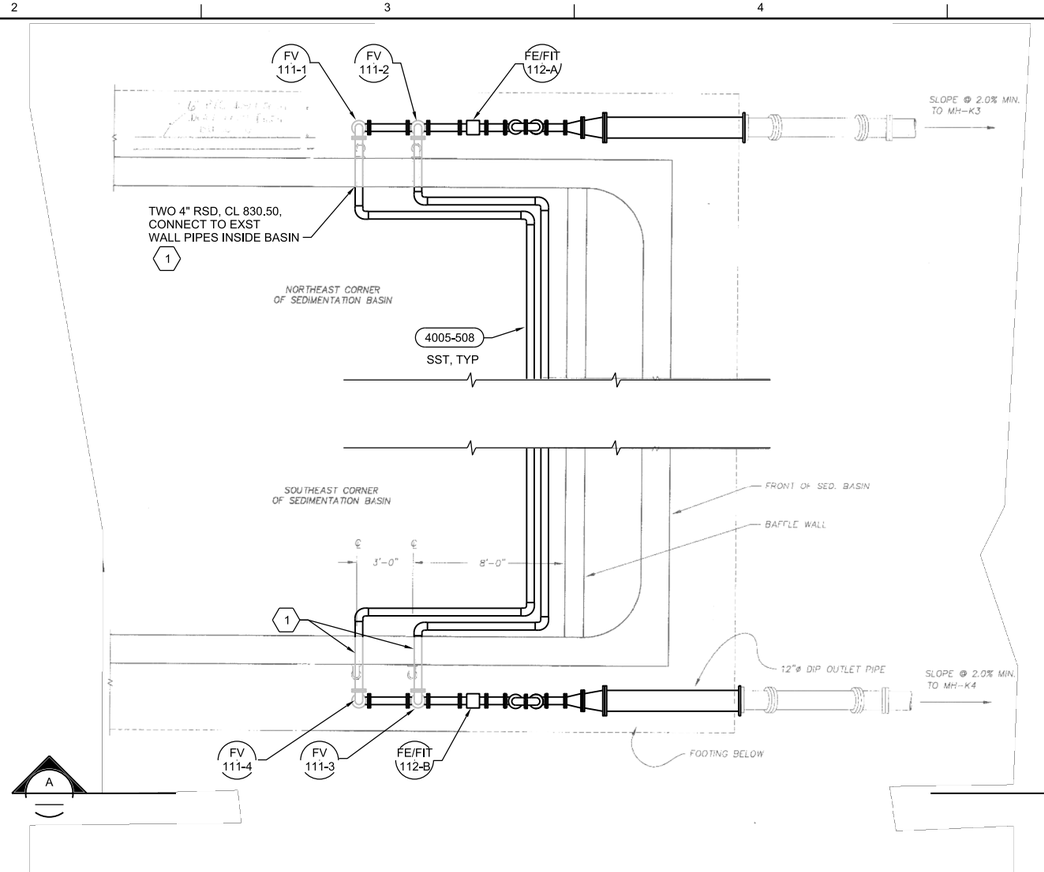

1 ENLARGED PLAN - SLUDGE DISCHARGE PIPE DETAIL

1/4"=1'-0"

SF-10-M-201

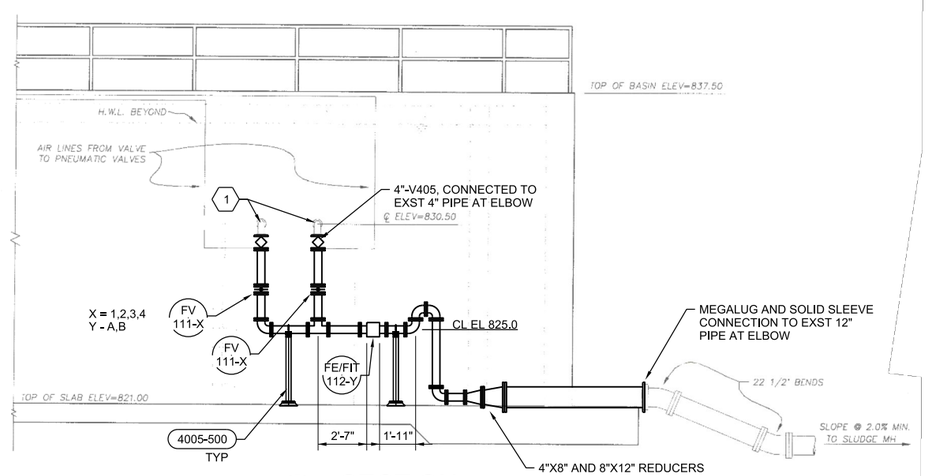

A SECTION

1/4"=1'-0"

SHEET KEYNOTES

1. RE-USE EXISTING WALL PIPES AND VERTICAL 90° ELBOWS.

Jacobs
10 10TH STREET, SUITE 1400
ATLANTA, GA 30309
GA LIC # PEF000350 (EXP 6/30/2022)

CROSSTOWN AND SOUTH FAYETTE WTP
HOSELESS SOLIDS COLLECTION SYSTEM

FAYETTE COUNTY WATER SYSTEM
FAYETTE COUNTY, GEORGIA

PROCESS MECHANICAL
SOUTH FAYETTE WTP
SEDIMENTATION BASINS 1-4
SECTIONS

REUSE OF DOCUMENTS: THIS DOCUMENT, AND THE IDEAS AND DESIGNS INCORPORATED HEREIN, AS AN INSTRUMENT OF PROFESSIONAL SERVICE, IS THE PROPERTY OF JACOBS AND IS NOT TO BE USED, IN WHOLE OR IN PART, FOR ANY OTHER PROJECT WITHOUT THE WRITTEN AUTHORIZATION OF JACOBS.
© JACOBS 2021. ALL RIGHTS RESERVED.

NO.	DATE	REVISION	BY	APVD

DSGN	DR	CHK	APVD
M RAM	M HALES	J HORTON	E MINCHEW

VERIFY SCALE
BAR IS ONE INCH ON ORIGINAL DRAWING.
0 1"

DATE	MARCH 2021
PROJ	D3101212
DWG	SF-10-M-301
SHEET	29 of 36

BID DOCUMENTS

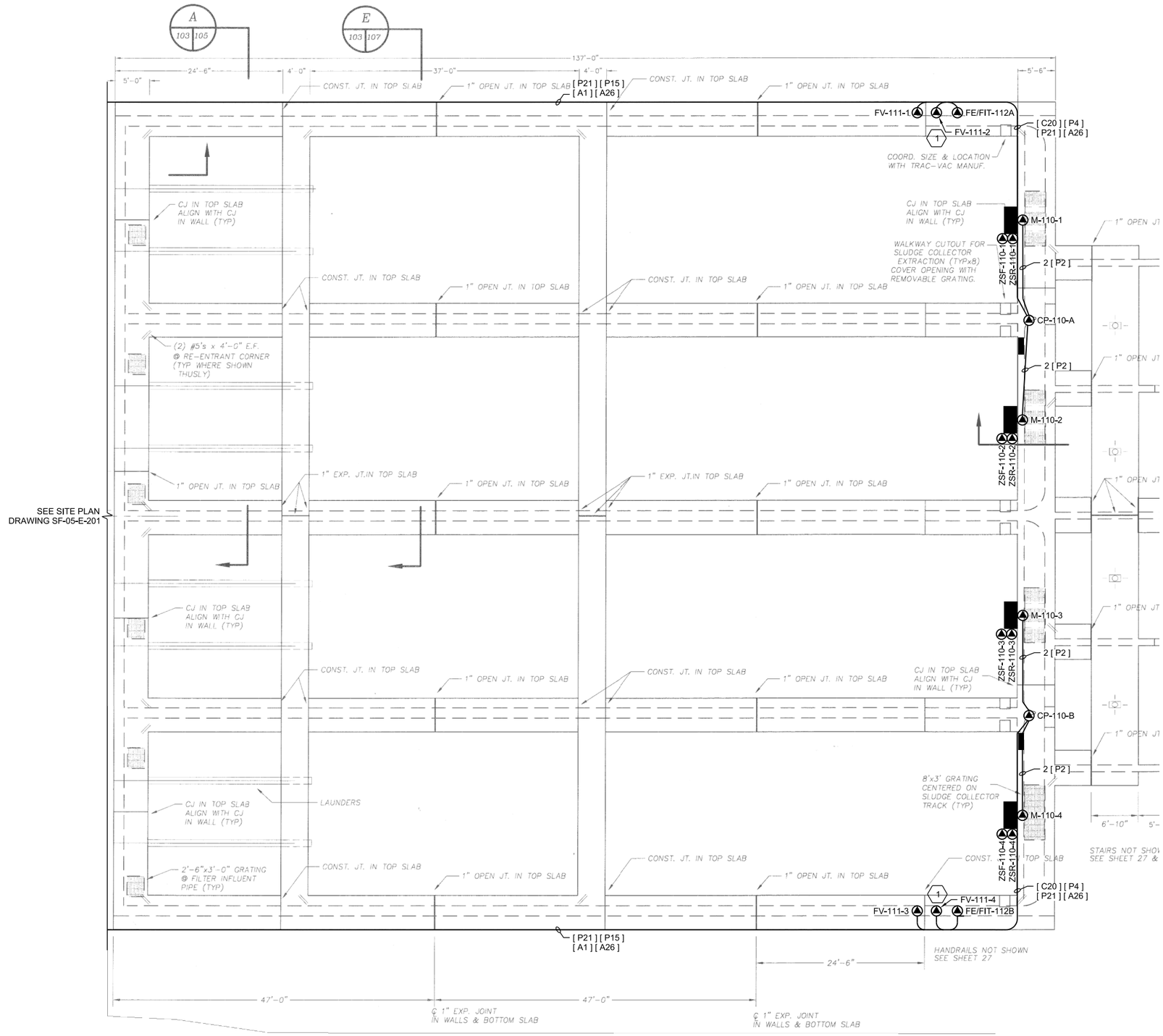

N

UPPER POWER PLAN

1/8"=1'-0"

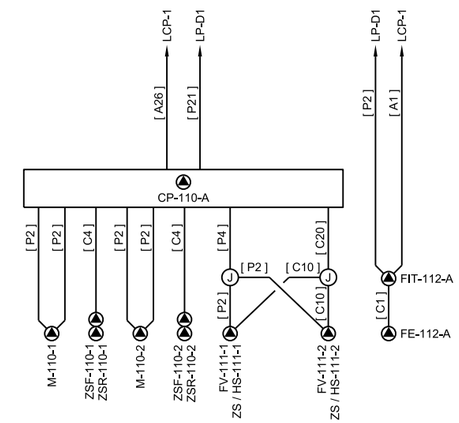

BASINS 1-2 WIRING DIAGRAM

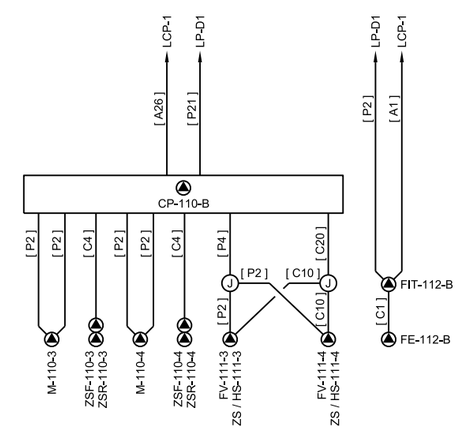

BASINS 3-4 WIRING DIAGRAM

SHEET KEYNOTES

1. VALVES AND FLOW METER LOCATED ON LOWER LEVEL. SEE DRAWING SF-10-M-201 AND SF-10-M-203 FOR VALVE AND INSTRUMENT LOCATIONS.

NO.	DATE	REVISION	BY	APVD

DSGN KB HORTON | DR G MESSER | CHK T HOMAYOONI | APVD KB HORTON

10 10TH STREET, SUITE 1400
ATLANTA, GA 30309
GA LIC # PEF000350 (EXP 6/30/2022)

CROSSTOWN AND SOUTH FAYETTE WTP
HOSELESS SOLIDS COLLECTION SYSTEM
FAYETTE COUNTY WATER SYSTEM
FAYETTE COUNTY, GEORGIA

Jacobs

ELECTRICAL

SOUTH FAYETTE WTP SEDIMENTATION BASINS 1-4 UPPER POWER PLAN

VERIFY SCALE
BAR IS ONE INCH ON ORIGINAL DRAWING.
0 1"

DATE	MARCH 2021
PROJ	D3101212
DWG	SF-10-E-201
SHEET	30 of 36

BID DOCUMENTS

REUSE OF DOCUMENTS: THIS DOCUMENT, AND THE IDEAS AND DESIGNS INCORPORATED HEREIN, AS AN INSTRUMENT OF PROFESSIONAL SERVICE, IS THE PROPERTY OF JACOBS AND IS NOT TO BE USED, IN WHOLE OR IN PART, FOR ANY OTHER PROJECT WITHOUT THE WRITTEN AUTHORIZATION OF JACOBS.
© JACOBS 2021. ALL RIGHTS RESERVED.

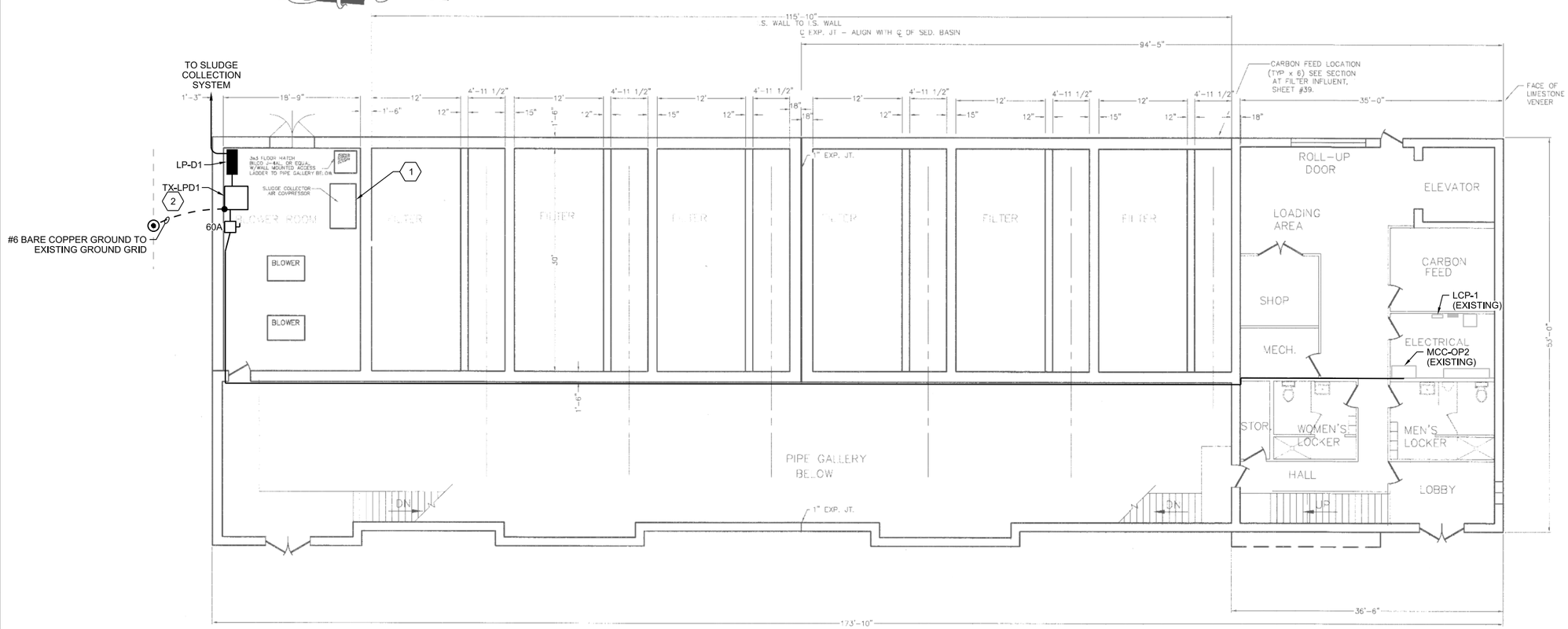

FILTER BUILDING – GROUND LEVEL FLOOR PLAN

1/8" = 1'-0"

SEE ARCHITECTURAL DRAWINGS FOR FLOOR PLAN INFORMATION.

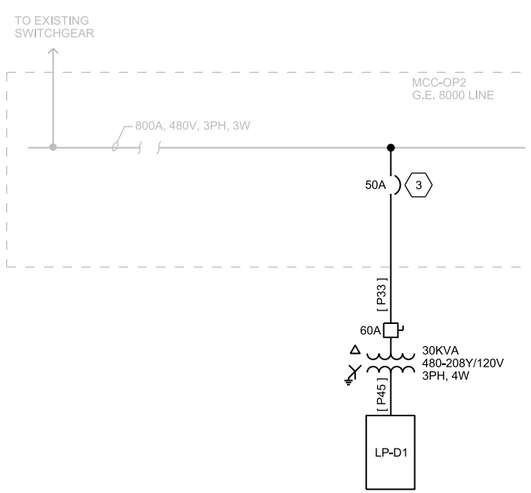

MCC-OP2 ONE LINE DIAGRAM

NTS

PANEL: LP-D1				LOCATION: SOUTH FAYETTE FILTER BUILDING BLOWER ROOM							
SERVICE VOLTAGE: 208/120V				PHASE: 3			WIRE: 4				
TOTAL LOAD KVA: 3.4				BUS SIZE: 100A			MAIN SIZE: 100A		TYPE: MCB		
REMARKS: SPD; * PROVIDE EGFI BREAKERS				NEUTRAL: FULL			MOUNTING: SURFACE				
LOAD IN KVA				BKR	CKT	CKT	BKR		LOAD IN KVA		
A	B	C	CIRCUIT DESCRIPTION	A/P	NO.	NO.	A/P	CIRCUIT DESCRIPTION	A	B	C
1.5			CP-110A	30/1	1	2	20/1	SPARE			
	1.5		CP-110B	30/1	3	4	20/1	SPARE			
		0.2	FIT-110-B	20/1	5	6	20/1	SPARE			
0.2			FIT-110-A	20/1	7	8	20/1	SPARE			
			SPARE	20/1	9	10	20/1	SPARE			
			SPARE	20/1	11	12	20/1	SPARE			
			SPARE	20/1	13	14	20/1	SPARE			
			SPARE	20/1	15	16	20/1	SPARE			
			SPARE	20/1	17	18	20/1	SPARE			
			SPARE	20/1*	19	20	20/1*	SPARE			
			SPARE	20/1*	21	22	20/1*	SPARE			
			SPARE	20/1*	23	24	20/1*	SPARE			
			SPACE	1P	25	26	1P	SPACE			
			SPACE	1P	27	28	1P	SPACE			
			SPACE	1P	29	30	1P	SPACE			
			SPACE	1P	31	32	1P	SPACE			
			SPACE	1P	33	34	1P	SPACE			
			SPACE	1P	35	36	1P	SPACE			
			SPACE	1P	37	38	1P	SPACE			
			SPACE	1P	39	40	1P	SPACE			
			SPACE	1P	41	42	1P	SPACE			
1.7	1.5	0.2	TOTAL						0.0	0.0	0.0

SHEET KEYNOTES

1. LEAVE AIR COMPRESSOR SYSTEM IN PLACE FOR FUTURE USE. LOCK DISCONNECT IN OPEN POSITION.
2. WALL MOUNT TX-LPD1 8' ABOVE FINISHED FLOOR.
3. EXISTING GE 8000 LINE MCC. INSTALL NEW CIRCUIT BREAKER IN EXISTING 12" SPACE.

NO.	DATE	REVISION	BY	APVD

DSGN KB HORTON | DR G MESSER | CHK T HOMAYOONI | APVD KB HORTON

Jacobs
10 10TH STREET, SUITE 1400
ATLANTA, GA 30309
GA LIC # PEF000350 (EXP 6/30/2022)

CROSSTOWN AND SOUTH FAYETTE WTP
HOSELESS SOLIDS COLLECTION SYSTEM

FAYETTE COUNTY WATER SYSTEM
FAYETTE COUNTY, GEORGIA

ELECTRICAL

SOUTH FAYETTE WTP DEMOLITION - FILTER BUILDING AIR COMPRESSOR SYSTEM

REUSE OF DOCUMENTS: THIS DOCUMENT, AND THE IDEAS AND DESIGNS INCORPORATED HEREIN, AS AN INSTRUMENT OF PROFESSIONAL SERVICE, IS THE PROPERTY OF JACOBS AND IS NOT TO BE USED, IN WHOLE OR IN PART, FOR ANY OTHER PROJECT WITHOUT THE WRITTEN AUTHORIZATION OF JACOBS.
© JACOBS 2021. ALL RIGHTS RESERVED.

VERIFY SCALE
BAR IS ONE INCH ON ORIGINAL DRAWING.
0 1"

DATE	MARCH 2021
PROJ	D3101212
DWG	SF-20-E-201
SHEET	31 of 36

BID DOCUMENTS

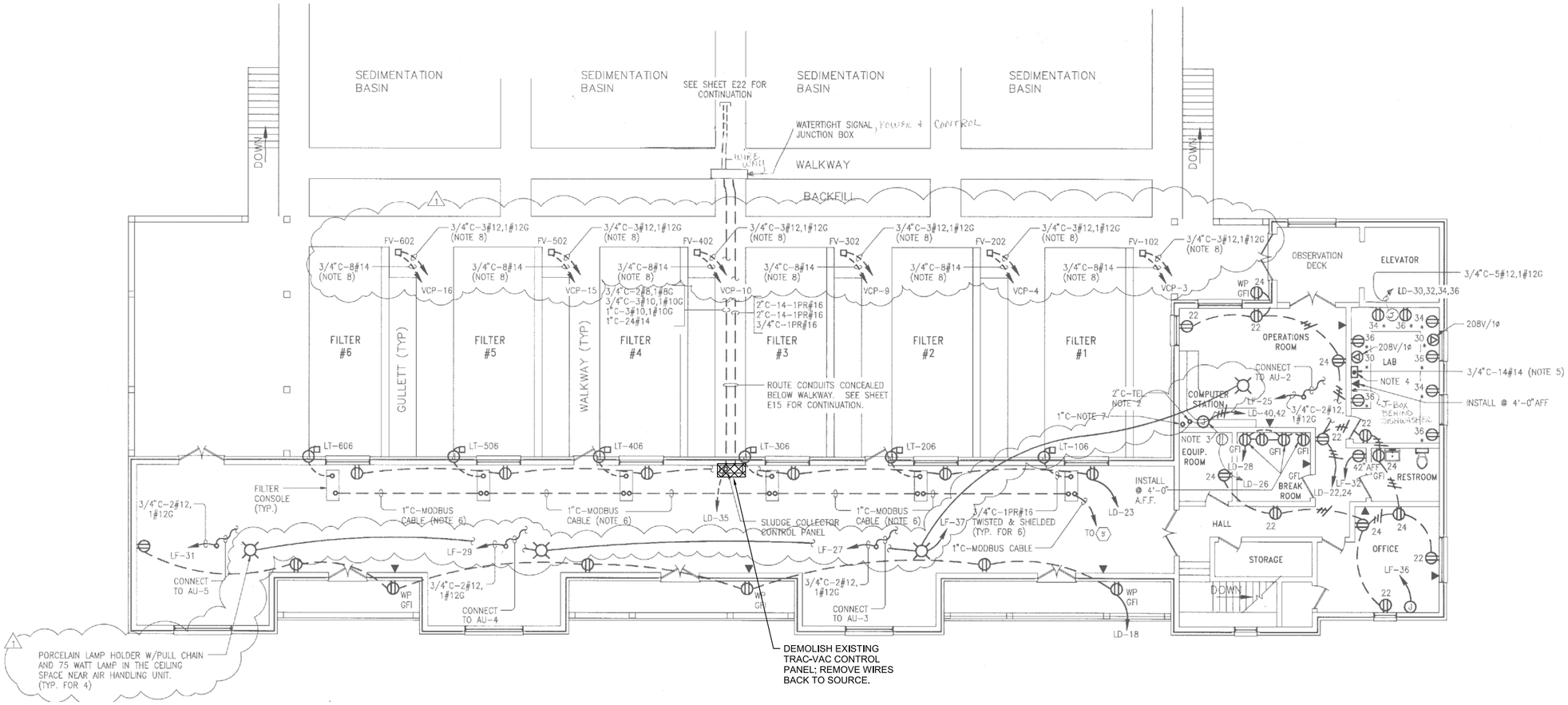

DEMOLITION - SECOND FLOOR

1/8"=1'-0"

NO.	DATE	REVISION	BY	APVD
DSGN	KB HORTON	DR M HALES	CHK T HOMAYOONI	APVD KB HORTON

REUSE OF DOCUMENTS: THIS DOCUMENT, AND THE IDEAS AND DESIGNS INCORPORATED HEREIN, AS AN INSTRUMENT OF PROFESSIONAL SERVICE, IS THE PROPERTY OF JACOBS AND IS NOT TO BE USED, IN WHOLE OR IN PART, FOR ANY OTHER PROJECT WITHOUT THE WRITTEN AUTHORIZATION OF JACOBS.
©JACOBS 2021. ALL RIGHTS RESERVED.

Jacobs
10 10TH STREET, SUITE 1400
ATLANTA, GA 30309
GA LIC # PEF000350 (EXP 6/30/2022)

CROSSTOWN AND SOUTH FAYETTE WTP
HOSELESS SOLIDS COLLECTION SYSTEM

FAYETTE COUNTY WATER SYSTEM
FAYETTE COUNTY, GEORGIA

ELECTRICAL
SOUTH FAYETTE WTP
DEMOLITION - FILTER BUILDING
SECOND FLOOR

VERIFY SCALE
BAR IS ONE INCH ON ORIGINAL DRAWING.
0 1"

DATE	MARCH 2021
PROJ	D3101212
DWG	SF-20-E-202
SHEET	32 of 36

BID DOCUMENTS

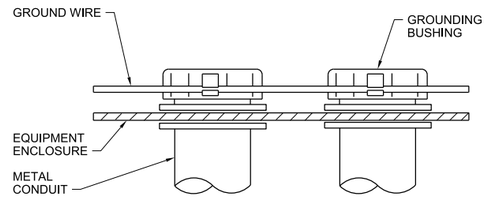

NOTES:
1. THE ENDS OF ALL CONDUITS REQUIRED TO BE GROUNDED BY THE SPECIFICATIONS SHALL BE GROUNDED IN ACCORDANCE WITH THIS DETAIL.

CONDUIT GROUNDING
NTS

2605-203

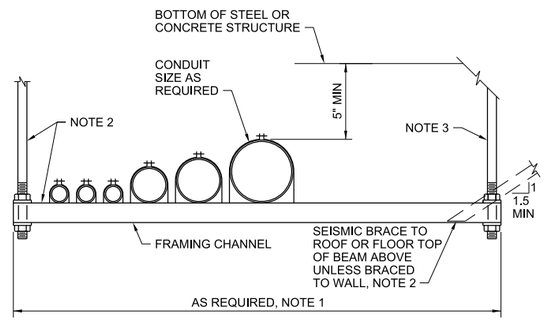

SINGLE RACK

NOTES:
1. LENGTH VARIES WITH NUMBER OF CONDUITS TO BE SUPPORTED AND SPACING BETWEEN CONDUITS.
2. DETERMINE SPAN AND TYPE OF SUPPORTS, LOCATE SUPPORTS, AND SIZE SUPPORT RODS, CONNECTIONS AND BRACES PER MANUFACTURER'S RECOMMENDATIONS AND SEISMIC REQUIREMENTS.
3. AT STEEL STRUCTURE, USE MALLEABLE BEAM CLAMP. AT CONCRETE STRUCTURE, USE UNIVERSAL CONCRETE INSERT, FRAMING CHANNEL WITH #4 x 3'-0" BELOW. TYPE AND SIZE AS REQUIRED BY TOTAL LOADS.
4. USE STAINLESS STEEL HARDWARE IN WET AND/OR CORROSIVE AREAS.
5. SPACE CONDUIT SUFFICIENTLY TO ALLOW REMOVAL OF ONE CONDUIT WITHOUT DISTURBING ADJACENT CONDUITS.

CONDUIT RACKING SYSTEM
NTS

2605-300

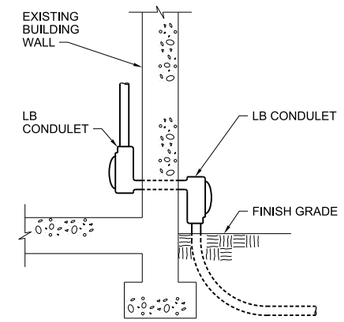

NOTES:
1. INSTALL CONDUITS THROUGH EXISTING WALLS IN ACCORDANCE WITH THIS DETAIL IF NOT OTHERWISE INDICATED.
2. DRILL HOLE USING METHODS THAT LEAVE A SMOOTH OPENING. SEAL OPENING AROUND CONDUIT, INSIDE, AND OUTSIDE, WITH ONE PART POLYURETHANE IMMERSIBLE SEALANT.

CONDUIT ENTRANCE
NTS

2605-304

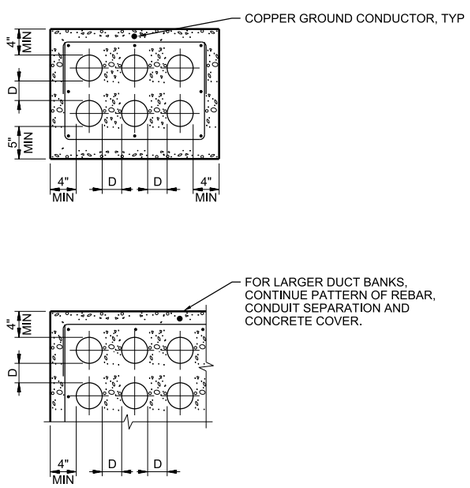

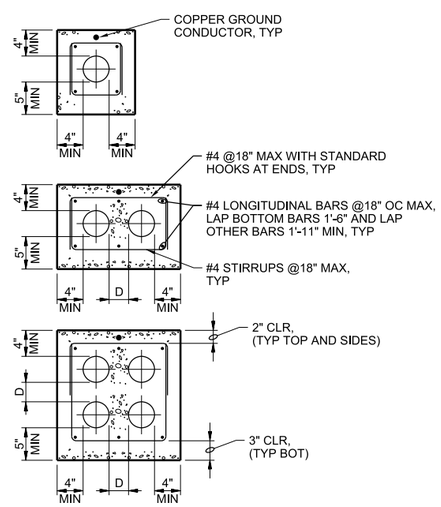

D = 3" FOR 2" AND LARGER CONDUITS

D = 2" FOR 1 1/2" AND SMALLER CONDUITS

NOTES:
1. PROVIDE 6" MINIMUM COMPACTED GRAVEL, 3/4" MINUS, UNDER ALL CONCRETE ENCASED DUCT RUNS.

DUCT BANK
NTS

2605-400

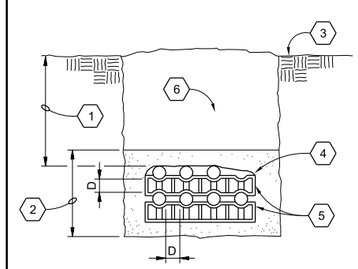

D = 3"MIN FOR 2"-6" CONDUIT

D = 2"MIN FOR <2 INCH CONDUIT

NOTES:
A. INSTALLATION OF DIRECT BURIAL DUCT BANKS WHICH INCLUDE THREE OR MORE CONDUITS OR DUCTS SHALL BE MADE IN ACCORDANCE WITH THIS DETAIL.
1. 2'-0" MIN (< 600 VOLTS) 3'-0" MIN (> 600 VOLTS)
2. BACKFILL WITH BEDDING AND PIPE ZONE MATERIAL 3" ABOVE AND 3" BELOW CONDUITS, HAND TAMP.
3. FINISH GRADE.
4. #12 GALV IRON TIE DOWN WIRE, MAX 4'-0" APART.
5. SPACERS.
6. COMPACTED EARTH BACKFILL.

TYPICAL DIRECT BURIAL DUCT BANK
NTS

2605-420

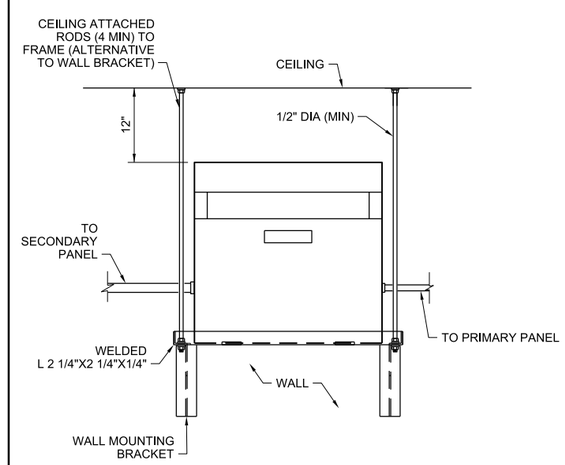

NOTES:
1. WHERE WALL MOUNTING BRACKETS ARE USED THEY SHALL BE INSTALLED IN ACCORDANCE WITH THE MANUFACTURER'S INSTALLATION INSTRUCTIONS. PROVIDE REINFORCING OF THE WALL TO ASSURE THAT IT IS CAPABLE OF SUPPORTING THE LOAD.

DRY TYPE TRANSFORMER INSTALLATION
NTS

2622-007

NO.	DATE	REVISION	BY	APVD

DSGN KB HORTON | DR G MESSER | CHK T HOMAYOONI | APVD KB HORTON

10 10TH STREET, SUITE 1400
ATLANTA, GA 30309
GA LIC # PEF000350 (EXP 6/30/2022)

CROSSTOWN AND SOUTH FAYETTE WTP
HOSELESS SOLIDS COLLECTION SYSTEM

FAYETTE COUNTY WATER SYSTEM
FAYETTE COUNTY, GEORGIA

Jacobs

ELECTRICAL
STANDARD DETAILS

REUSE OF DOCUMENTS: THIS DOCUMENT, AND THE IDEAS AND DESIGNS INCORPORATED HEREIN, AS AN INSTRUMENT OF PROFESSIONAL SERVICE, IS THE PROPERTY OF JACOBS AND IS NOT TO BE USED, IN WHOLE OR IN PART, FOR ANY OTHER PROJECT WITHOUT THE WRITTEN AUTHORIZATION OF JACOBS.
© JACOBS 2021. ALL RIGHTS RESERVED.

VERIFY SCALE
BAR IS ONE INCH ON ORIGINAL DRAWING.
0 1"

DATE	MARCH 2021
PROJ	D3101212
DWG	99-E-501
SHEET	33 of 36

BID DOCUMENTS

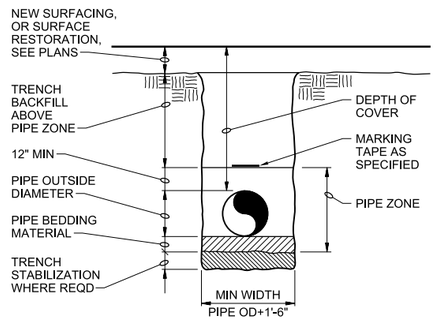

TYPICAL TRENCH

NTS

3123-110

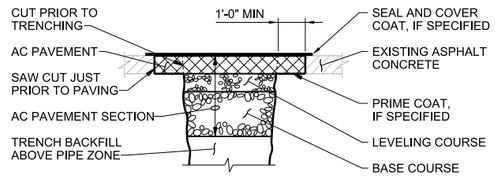

ASPHALT SURFACING

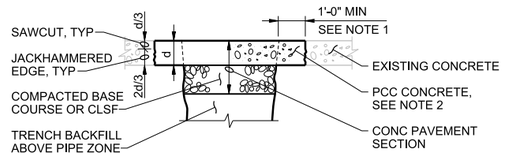

PCC CONCRETE SURFACING

NOTES:

1. IF LOCATION OF TRENCH SAW CUT IS WITHIN 2 FEET OF AN EXISTING JOINT OR EDGE OF CONCRETE, REPLACE ENTIRE CONCRETE TO THE JOINT OR EDGE.
2. CONSTRUCT JOINTS ACROSS NEW CONCRETE TO MATCH EXISTING JOINT TYPES AND LOCATIONS.

SURFACE RESTORATION

NTS

3123-115

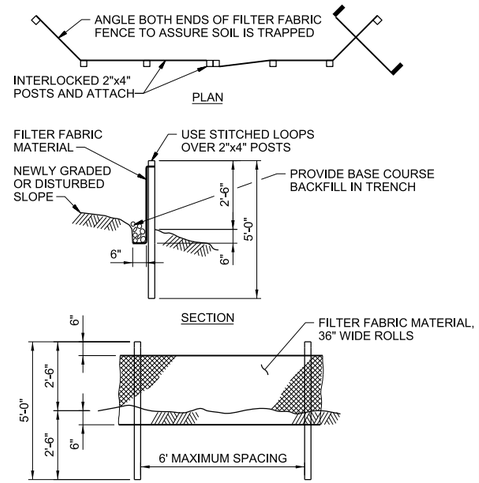

NOTES:

1. BURY BOTTOM OF FILTER FABRIC 6" VERTICALLY BELOW FINISHED GRADE.
2. 2"x4" DOUGLAS FIR OR STEEL FENCE POSTS.
3. STITCHED LOOPS TO BE INSTALLED DOWNHILL SIDE OF SLOPE.
4. COMPACT ALL AREAS OF FILTER FABRIC TRENCH.

SEDIMENT FENCE

NTS

3125-165

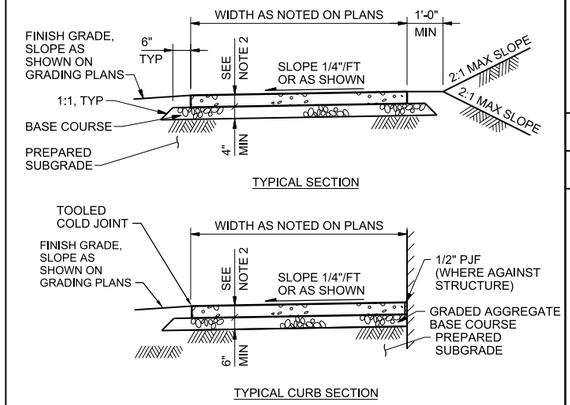

NOTES:

1. CONCRETE DEPTH FOR STANDARD SIDWALKS SHALL BE NOMINAL 6" MINIMUM.
2. 6X6-6/6 WELDED WIRE REINFORCEMENT SHALL BE USED WITH A MINIMUM 2" COVER.
3. CONCRETE MIX:
   A. COMPRESSIVE STRENGTH OF 4,000 PSI MINIMUM AND FLEXURAL STRENGTH OF 650 PSI MINUMUM, BOTH AT 28 DAYS.
   B. CONCRETE TARGET STRENGTHS SHALL BE IN ACCORDANCE WITH ACI 318/318R
   C. MAXIMUM WATER-CEMENT RATIO SHALL NOT EXCEED 0.48.
   D. ALLOWABLE SLUMP: 3 INCHES, PLUS OR MINUS 1 INCH.
   E. CO NOT USE FROZEN MATERIALS CONTAINING ICE OR SNOW.
   F. CONCRETE TEMPERATURE AS DELIVERED TO SITE READY FOR PLACEMENT SHALL BE ABOVE 50 DEGREES F AND BELOW 90 DEGREES F.
4. JOINT SPACING: 10 FEET
5. SURFACE FINISH: PAVEMENT SHALL BE SCREEDED, FLOATED, AND GIVEN HEAVY
6. NYLON BRISTLE-BROOMED SKID-RESISTANT SURFACE.

TYPICAL CONCRETE SIDEWALK

NTS

3213-220

NO.	DATE	REVISION	BY	APVD

DSGN D RATZLAFF | DR D RATZLAFF | CHK D RATZLAFF | APVD N MEADE | N MEADE

© JACOBS 2021, ALL RIGHTS RESERVED.

Jacobs
10 10TH STREET, SUITE 1400
ATLANTA, GA 30309
GA LIC # PEF000350 (EXP 6/30/2022)

CROSSTOWN AND SOUTH FAYETTE WTP
HOSELESS SOLIDS COLLECTION SYSTEM

FAYETTE COUNTY WATER SYSTEM
FAYETTE COUNTY, GEORGIA

CIVIL
STANDARD DETAILS

REUSE OF DOCUMENTS: THIS DOCUMENT, AND THE IDEAS AND DESIGNS INCORPORATED HEREIN, AS AN INSTRUMENT OF PROFESSIONAL SERVICE, IS THE PROPERTY OF JACOBS AND IS NOT TO BE USED, IN WHOLE OR IN PART, FOR ANY OTHER PROJECT WITHOUT THE WRITTEN AUTHORIZATION OF JACOBS.

BID DOCUMENTS

VERIFY SCALE
BAR IS ONE INCH ON ORIGINAL DRAWING.
0 1"

DATE	MARCH 2021
PROJ	D3101212
DWG	99-C-501
SHEET	34 of 36

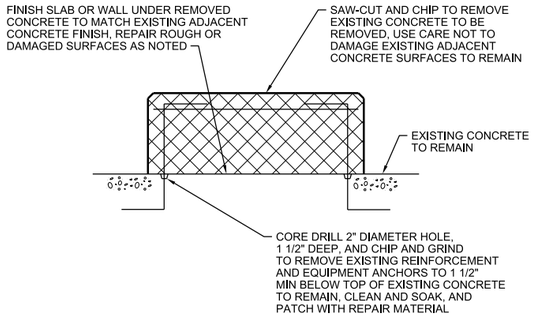

NOTES:

1. REMOVE CONCRETE OUT TO SOUND CONCRETE.
2. IF CHIPPING INTO THE SURFACE OF THE EXISTING SLAB OR WALL TO REMAIN IS REQUIRED, MAKE EDGES PERPENDICULAR TO THE SURFACE. DO NOT FEATHER EDGES.
3. FILL DEFECTIVE AREA WITH AN APPROVED PREPACKAGED REPAIR MATERIAL TO MATCH APPEARANCE OF ADJACENT CONCRETE SURFACES.
4. USE APPROVED BONDING AGENT ON SURFACES TO BE PATCHED PRIOR TO PLACING REPAIR MATERIAL.
5. DEMONSTRATE METHODS FOR REPAIR USING ACTUAL MATERIALS, METHODS, AND CURING PROCEDURES REQUIRED BY MATERIAL MANUFACTURERS. CONSULT WITH BONDING AGENT MANUFACTURER AND REPAIR MATERIAL MANUFACTURER ON TECHNIQUES.

CONCRETE DEMOLITION

NTS

0330-143

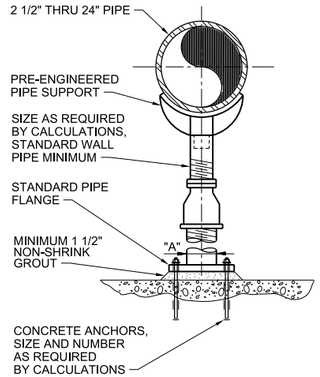

DIMENSION TABLE	
PIPE SIZE	"A" MINIMUM NOMINAL PIPE SIZE
2-1/2"	2-1/2"
3"	2-1/2"
4"	3"
6"	3"
8"	3"
10"	3"
12"	3"
14"	4"
16"	4"
20"	6"
24"	6"

NOTE:
SUBMIT FINAL DESIGN AND CALCULATIONS FOR SUPPORT AND ANCHORAGE AS SPECIFIED.

PIPE SUPPORT
SADDLE SUPPORT PEDESTAL TYPE - ADJUSTABLE

NTS

4005-500

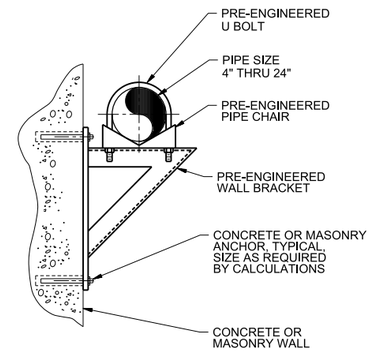

NOTES:

1. WALL BRACKET SHALL BE MEDIUM HEAVY DUTY AS REQUIRED BY CALCULATIONS.
2. SUBMIT FINAL DESIGN AND CALCULATIONS FOR SUPPORT AND ANCHORAGE AS SPECIFIED.

PIPE SUPPORT - WALL MOUNTED MEDIUM

NTS

4005-508

NO.	DATE	REVISION	BY	APVD

DSGN E MINCHEW | DR E MINCHEW | CHK M HALES | APVD J HORTON | APVD E MINCHEW

REUSE OF DOCUMENTS: THIS DOCUMENT, AND THE IDEAS AND DESIGNS INCORPORATED HEREIN, AS AN INSTRUMENT OF PROFESSIONAL SERVICE, IS THE PROPERTY OF JACOBS AND IS NOT TO BE USED, IN WHOLE OR IN PART, FOR ANY OTHER PROJECT WITHOUT THE WRITTEN AUTHORIZATION OF JACOBS.
© JACOBS 2021. ALL RIGHTS RESERVED.

Jacobs
10 10TH STREET, SUITE 1400
ATLANTA, GA 30309
GA LIC # PEF000350 (EXP 6/30/2022)

CROSSTOWN AND SOUTH FAYETTE WTP
HOSELESS SOLIDS COLLECTION SYSTEM

FAYETTE COUNTY WATER SYSTEM
FAYETTE COUNTY, GEORGIA

PROCESS MECHANICAL
STANDARD DETAILS

VERIFY SCALE
BAR IS ONE INCH ON ORIGINAL DRAWING.
0 1"

DATE	MARCH 2021
PROJ	D3101212
DWG	99-M-501
SHEET	35 of 36

BID DOCUMENTS

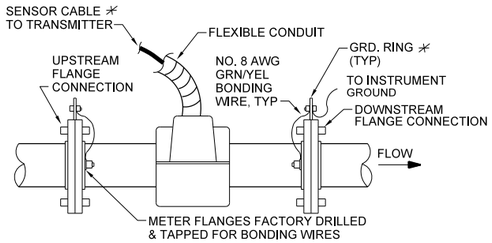

NOTES:

1. COMPONENTS DESIGNATED BY ✳ ARE SUPPLIED BY INSTRUMENT MANUFACTURER.
2. IF PIPE IS NON-CONDUCTIVE BOND MAGMETER TO ONE OF THE FOLLOWING ACCEPTABLE GROUNDS:
   A) METALLIC WATER PIPE IF BURIED PORTION IS MORE THAN 10'.
   B) STRUCTURAL STEEL.

MAGNETIC FLOWMETER INSTALLATION

NTS

4091-222G

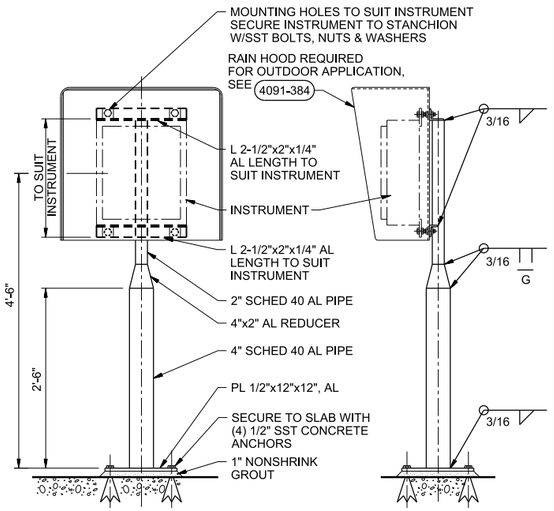

NOTES:

1. ROUND OFF ALL EXPOSED EDGES AND CORNERS.
2. PAINT ALUMINUM IN CONTACT WITH CONCRETE ACCORDING TO SPECIFICATIONS FOR PAINTING.

STANCHION SUPPORT FOR CASE MOUNTED INSTRUMENTS

NTS

4091-383

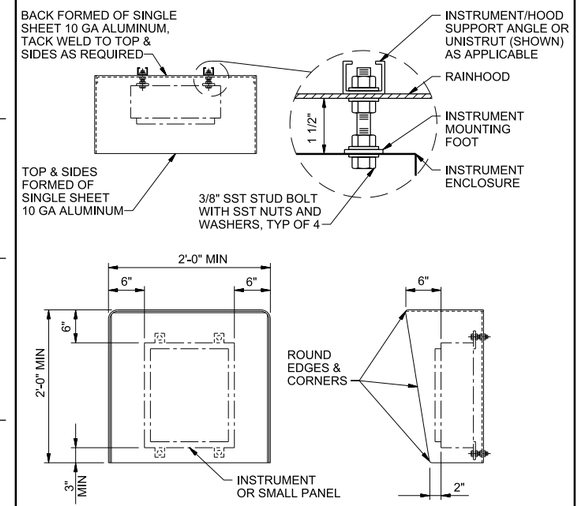

NOTES:

1. ALL EXPOSED EDGES TO BE GROUND SMOOTH AND BURR FREE.
2. MOUNT RAIN HOOD BETWEEN INSTRUMENT AND MOUNTING BRACKET. DRILL HOLES IN RAIN HOOD AS PER MOUNTING HOLES FOR INSTRUMENT, SEE 4091-383 4091-385

RAIN HOOD INSTALLATION

NTS

4091-384

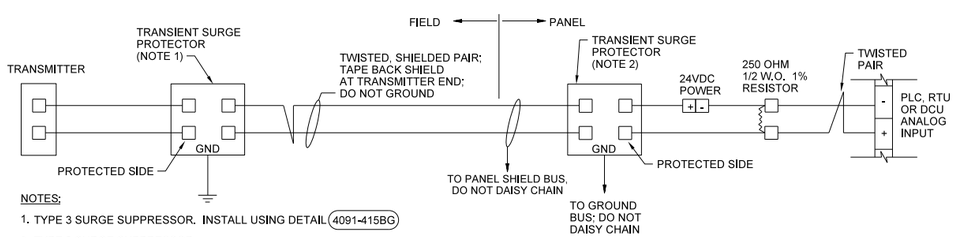

NOTES:

1. TYPE 3 SURGE SUPPRESSOR. INSTALL USING DETAIL 4091-415BG
2. TYPE 2 SURGE SUPPRESSOR.

2-WIRE TRANSMITTER

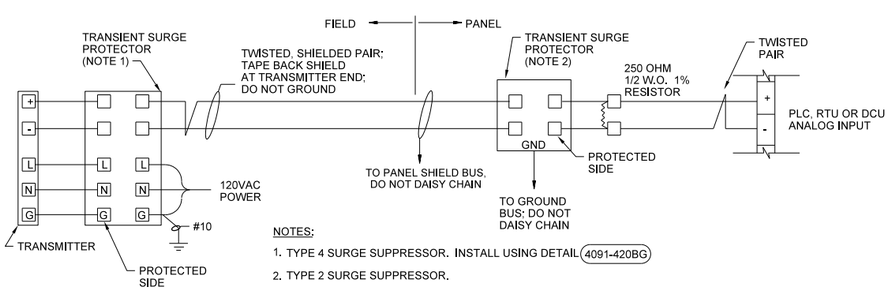

NOTES:

1. TYPE 4 SURGE SUPPRESSOR. INSTALL USING DETAIL 4091-420BG
2. TYPE 2 SURGE SUPPRESSOR.

4-WIRE TRANSMITTER

TYPICAL OUTDOOR TRANSMITTERS

NTS

4091-405BG

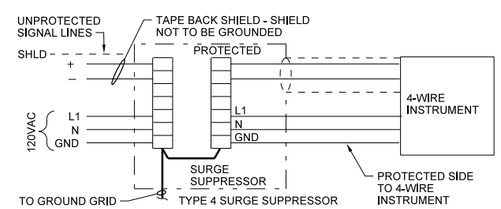

WIRING DIAGRAM

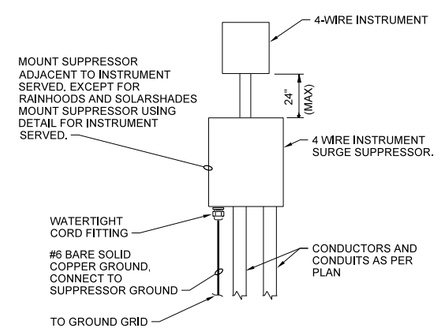

SURGE SUPPRESSOR INSTALLATION 4-WIRE INSTRUMENT

NTS

4091-420BG

NO.	DATE	REVISION	BY	APVD

DSGN CL BATES | DR G MESSER | CHK J HANDWORK | APVD J HANDWORK

© JACOBS 2021. ALL RIGHTS RESERVED.

10 10TH STREET, SUITE 1400
ATLANTA, GA 30309
GA LIC # PEF000350 (EXP 6/30/2022)

CROSSTOWN AND SOUTH FAYETTE WTP
HOSELESS SOLIDS COLLECTION SYSTEM

FAYETTE COUNTY WATER SYSTEM
FAYETTE COUNTY, GEORGIA

INSTRUMENTATION AND CONTROL
STANDARD DETAILS

REUSE OF DOCUMENTS: THIS DOCUMENT, AND THE IDEAS AND DESIGNS INCORPORATED HEREIN, AS AN INSTRUMENT OF PROFESSIONAL SERVICE, IS THE PROPERTY OF JACOBS AND IS NOT TO BE USED, IN WHOLE OR IN PART, FOR ANY OTHER PROJECT WITHOUT THE WRITTEN AUTHORIZATION OF JACOBS.

VERIFY SCALE
BAR IS ONE INCH ON ORIGINAL DRAWING.
0 1"

DATE	MARCH 2021
PROJ	D3101212
DWG	99-N-501
SHEET	36 of 36

BID DOCUMENTS